SERVICE MANUAL

CLASSIC 60

SERIAL NUMBER FROM APRIL 2009 (0409) TO PRESENT

C UL US LISTED

MOVINCOOL®
THE #1 SPOT COOLING SOLUTION

DocID: 00G00043E

© 2009 DENSO SALES CALIFORNIA, INC.
All rights reserved. This book may not be reproduced or copied, in whole or in part, without the written permission of the publisher. DENSO SALES CALIFORNIA, INC. reserves the right to make changes without prior notice. MovinCool is a registered trademark of DENSO Corporation.

Table of Contents

Operation Section

1. PRECAUTIONS FOR SAFETY

1.1 Foreword . . . 6
1.2 Definition of Terms . . . 6
1.3 General Precautions . . . 6

2. SPECIFICATIONS

2.1 Exterior Dimension Diagram . . . 7
2.2 Technical Specifications . . . 8
2.3 Characteristics . . . 9

3. CONSTRUCTION

3.1 Internal Structure . . . 15
3.2 Basic Construction . . . 16
3.3 Air Flow . . . 16

4. REFRIGERANT SYSTEM

4.1 Refrigerant System Construction . . . 17
4.2 Compressor . . . 18
4.3 Condenser . . . 19
4.4 Capillary Tube . . . 19
4.5 Evaporator . . . 19
4.6 High Pressure Switch . . . 20

5. ELECTRICAL SYSTEM

5.1 Circuit Diagram . . . 21
5.2 Control Box and Relay Board . . . 22
5.3 Power Supply Requirements . . . 23
5.4 Wall Thermostat Connection . . . 25
5.5 Warning Signal Connection (Output Signal Terminal L+ and L-) . . . 27
5.6 Fire Alarm Control Panel Connection (Input Signal Terminal E+ and E-) . . . 28
5.7 Basic Operation . . . 29
5.8 Relay Board . . . 31
5.9 Control Specifications . . . 34
5.10 Compressor . . . 36
5.11 Fan Motor . . . 37
5.12 Transformer . . . 38

5.13 Control Box 38
5.14 Compressor Motor Relay 39
5.15 Fan Motor Relay 39
5.16 Overcurrent Relay. 40
5.17 Temperature Thermistor 40

Repair Section

6. TROUBLESHOOTING

6.1 Troubleshooting 41
6.2 Self-Diagnostic Codes 42
6.3 Troubleshooting Chart 43
6.4 Basic Inspection 47
6.5 Inspection of Transformer 49
6.6 Inspection of Fan Motor 49
6.7 Inspection of Compressor Motor 50
6.8 Thermistor Inspection 50
6.9 Wiring Connection Inspection 50
6.10 Refrigerant System Inspection 51

7. DISASSEMBLY

7.1 Parts Construction 52
7.2 Disassembly 53
7.3 Removal of Control Panel 55
7.4 Removal of Condenser Fan Assembly 56
7.5 Removal of Evaporator Fan Assembly 58
7.6 Removal of Electrical Components 61

8. REFRIGERANT SYSTEM REPAIR

8.1 Repair of Refrigerant System 62
8.2 Removal of Refrigeration Cycle Components 64
8.3 Charging the System with R-410A Refrigerant 65
8.4 Refrigerant Charging Work 70

9. REASSEMBLY

9.1 Removal of Unit 72
9.2 Compressor Mounting 72
9.3 Condenser Fan Assembly 72
9.4 Evaporator Fan Assembly 73
9.5 Wiring Notice 73
9.6 Perform the Inspection 73

1. PRECAUTIONS FOR SAFETY

1.1 Foreword

- This manual has been published to service the MovinCool Classic 60. Please use this service manual only when servicing the Classic 60.

1.2 Definition of Terms

⚠ WARNING	Describes precautions that should be observed in order to prevent injury to the user during installation or unit operation.
⚠ CAUTION	Describes precautions that should be observed in order to prevent damage to the unit or its components, which may occur during installation or unit operation if sufficient care is not taken.
NOTE	Provides additional information that facilitates installation or unit operation.

1.3 General Precautions

⚠ WARNING

- **All electrical work if necessary, should only be performed by qualified electrical personnel. Repair to electrical components by non-certified technicians may result in personal injury and/or damage to the unit. All electrical components replaced must be genuine MovinCool parts, purchased from an authorized reseller.**
- **When handling refrigerant, always wear proper eye protection and do not allow the refrigerant to come in contact with your skin.**
- **Do not expose refrigerant to an open flame.**
- **The proper electrical outlet for MovinCool units must be equipped with a “UL” approved ground-fault breaker to prevent electrical shock from the unit.**
- **When brazing any tubing, always wear eye protection, and work only in a well ventilated area.**
- **Disconnect power before servicing unit.**
- **Be careful of any sharp edges when working on unit.**

2. SPECIFICATIONS

2.1 Exterior Dimension Diagram

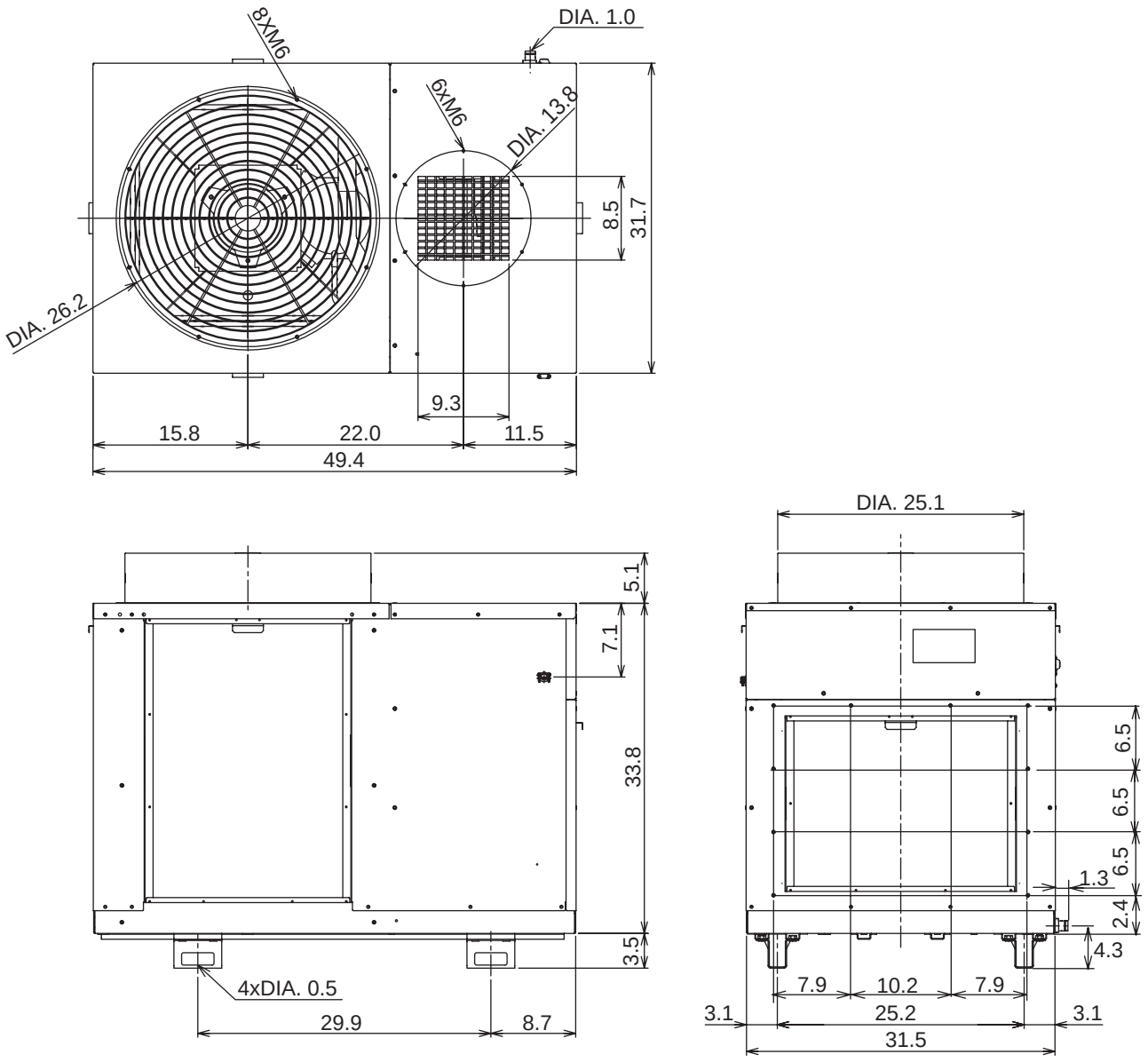

(Unit: inch)

I003016

2.2 Technical Specifications

Technical Specifications		Classic 60
Electronic Features	Control Panel	Electronic
	Thermostat Control	Electronic
Cooling Capacity*1	Capacity	60000 Btu/h (17600 W)
Electronic Characteristics	Voltage Requirement	3 Phase, 460 V, 60 Hz
	Total Power Consumption*1	5.90 kW
	Current consumption*1	8.8 A
	Recommended Fuse Size	20 A
	MIN.MAX. Voltage	MIN 414 V, MAX 506 V
Fan Motors	Motor Output (Evaporator)	0.75 kW
	Motor Output (Condenser)	0.40 kW
Evaporator	Fan Type	Centrifugal
	Rated Air Flow	1580 CFM (2680 m^3/h)
	Rated External Static Pressure	0.57 IWG (142 Pa)
Condenser	Fan Type	Propeller
	Rated Air Flow	3800 CFM (6460 m^3/h)
	Rated External Static Pressure	0 IWG (0 Pa)
Compressor	Type	Hermetic Scroll
	Output	3.89 kW
Refrigerant Charge	R-410A	5.50 lb (2.50 kg)
Dimension	W x D x H	31.7 x 49.4 x 42.4 in (804 x 1254 x 1077 mm)
Net Weight		474 lb (215 kg)
Operating Conditions	MIN.MAX. (at 50 %RH)	MIN 75 °F (24 °C), MAX 113 °F (45 °C)
Max.Static Pressure	Cool Duct Hose - MIN. MAX.	MIN 0.57 IWG (142 Pa), MAX 1.37 IWG (341 Pa)
	Hot Duct Hose - MIN. MAX.	MIN 0 IWG (0 Pa), MAX 0.05 IWG (341 Pa)
Max.Sound Level*2	Without Condenser Duct	72 dB (A)

- Specifications are subject to change without notice.

< NOTE >

*1 : Rating Condition: 95 °F (35 °C), 60 %RH
Rated at evaporator external static pressure 0.57 IWG (142 Pa).
*2 Measured at 3.28 ft (1.0 m) from surface of unit.

2.3 Characteristics

(1) How to read the cooling capacity curve

Example

<Condition>
Dry Bulb : 95 °F (35 °C)
Wet Bulb : 77 °F (25 °C)
Air Volume : 1500 CFM (2550 m^3/h)

<Cooling Capacity>
MIN. : 50500 Btu/h
MAX. : 58000 Btu/h

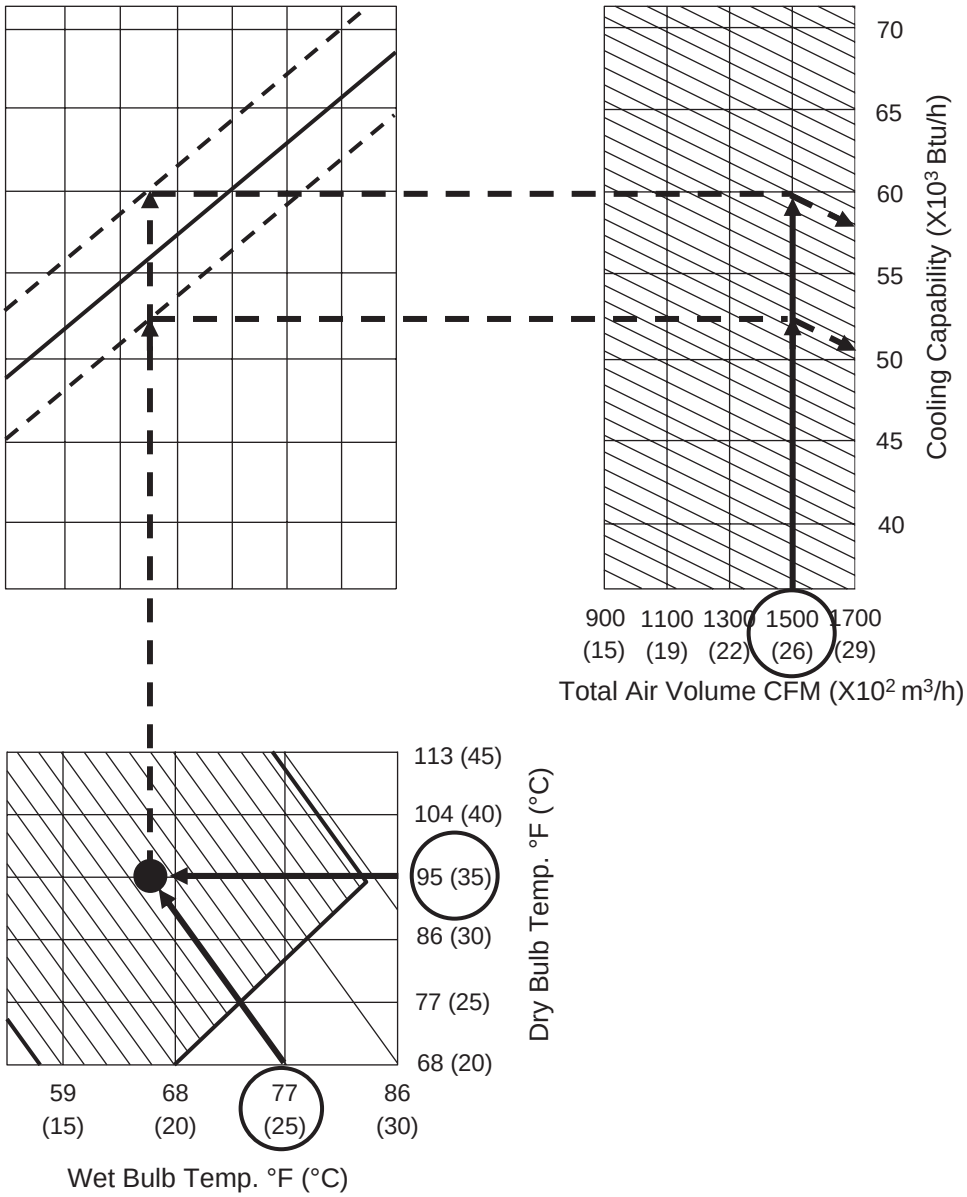

I003046

(2) Cooling capacity curve

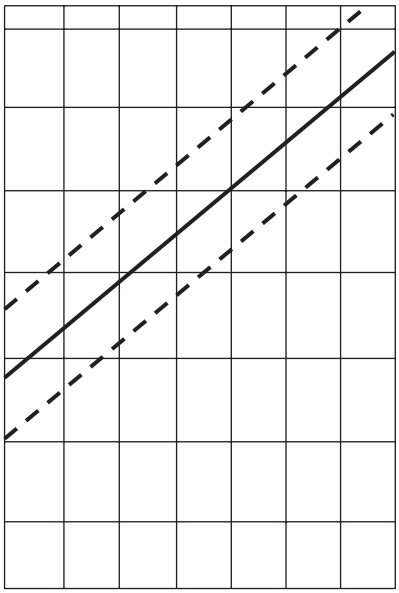

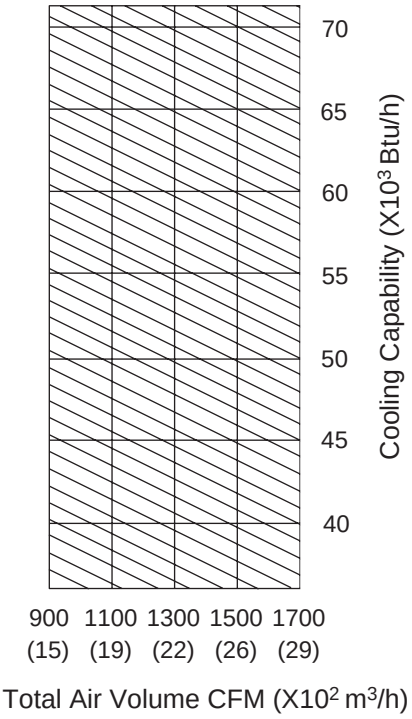

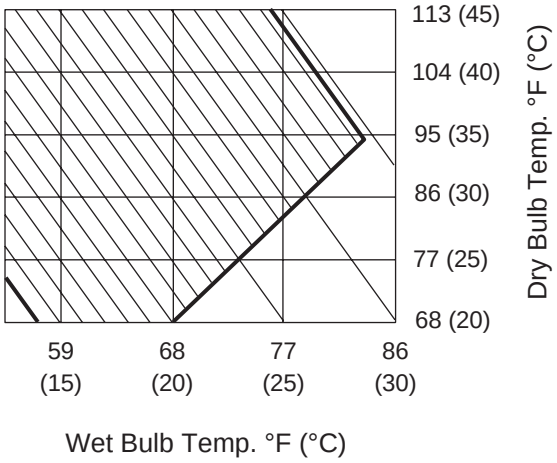

I003047

(3) Power consumption curve

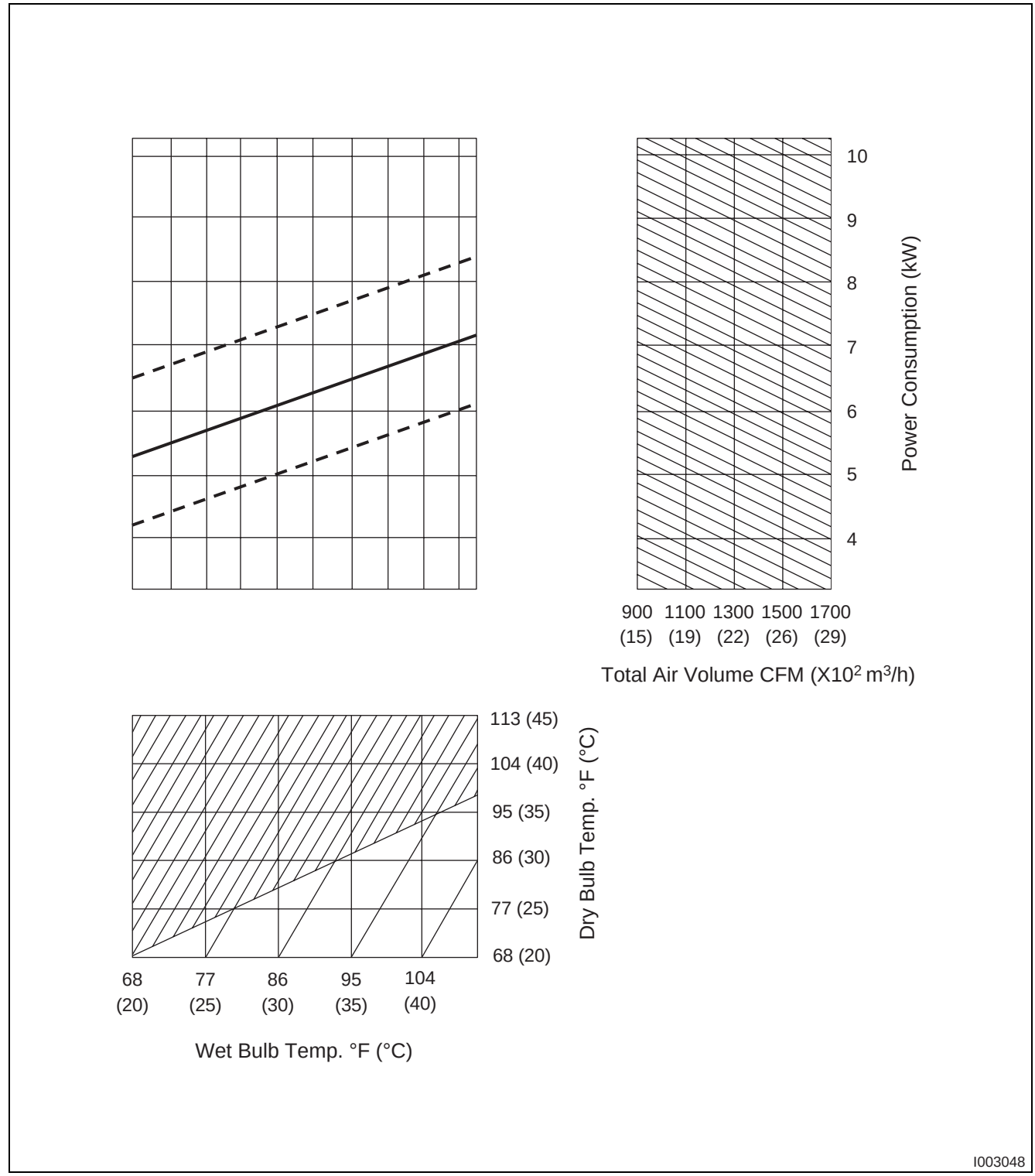

(4) Current consumption curve

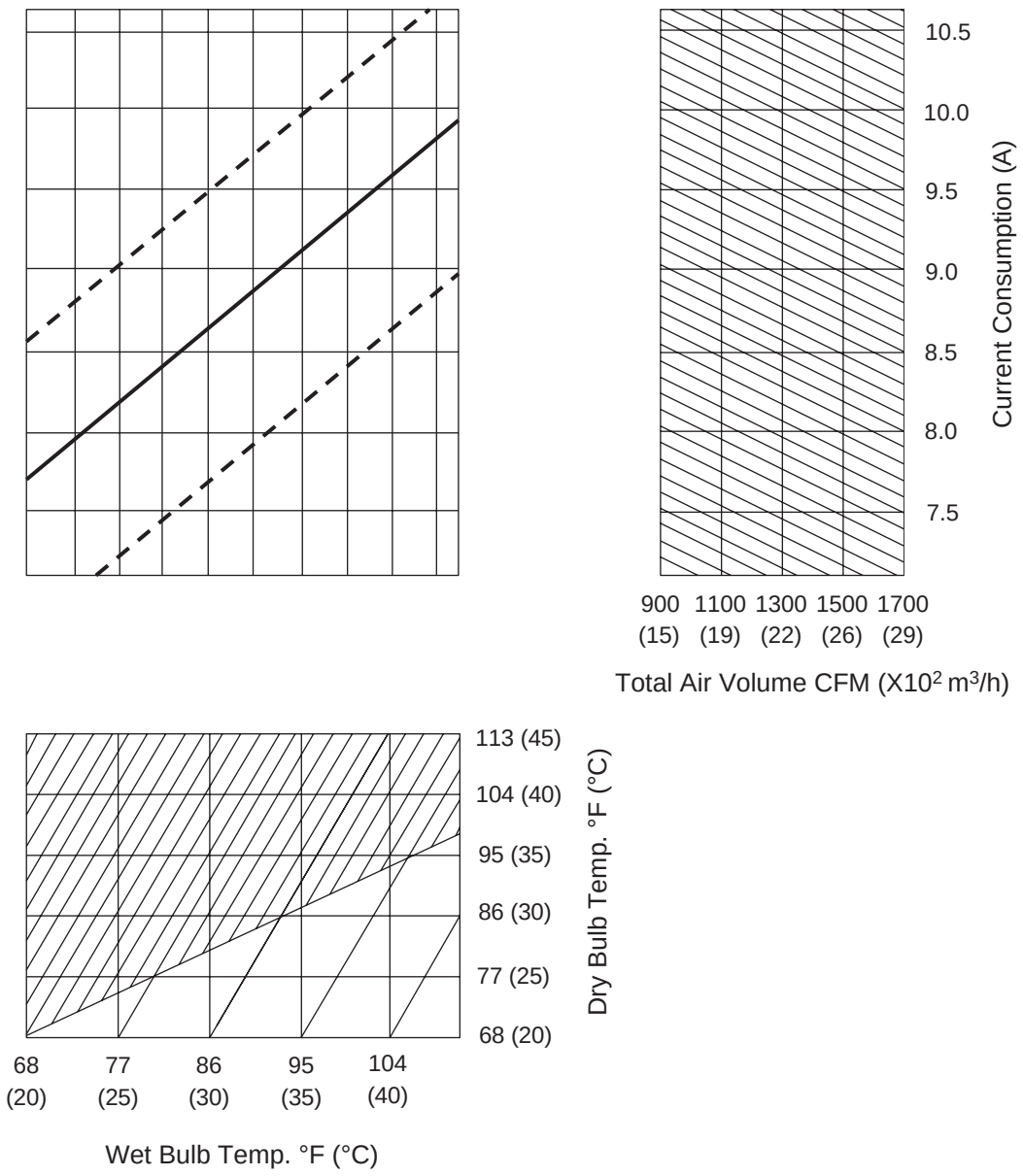

(5) Cool air temperature difference curve

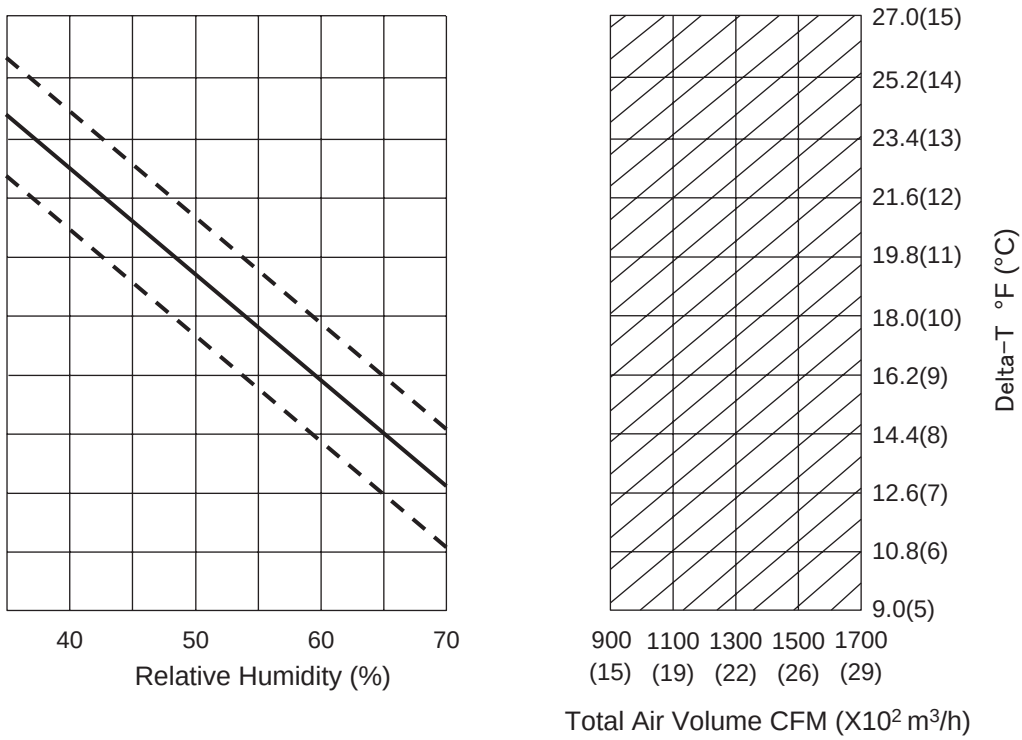

I003050

(6) Extension static pressure and air volume curve of cool air

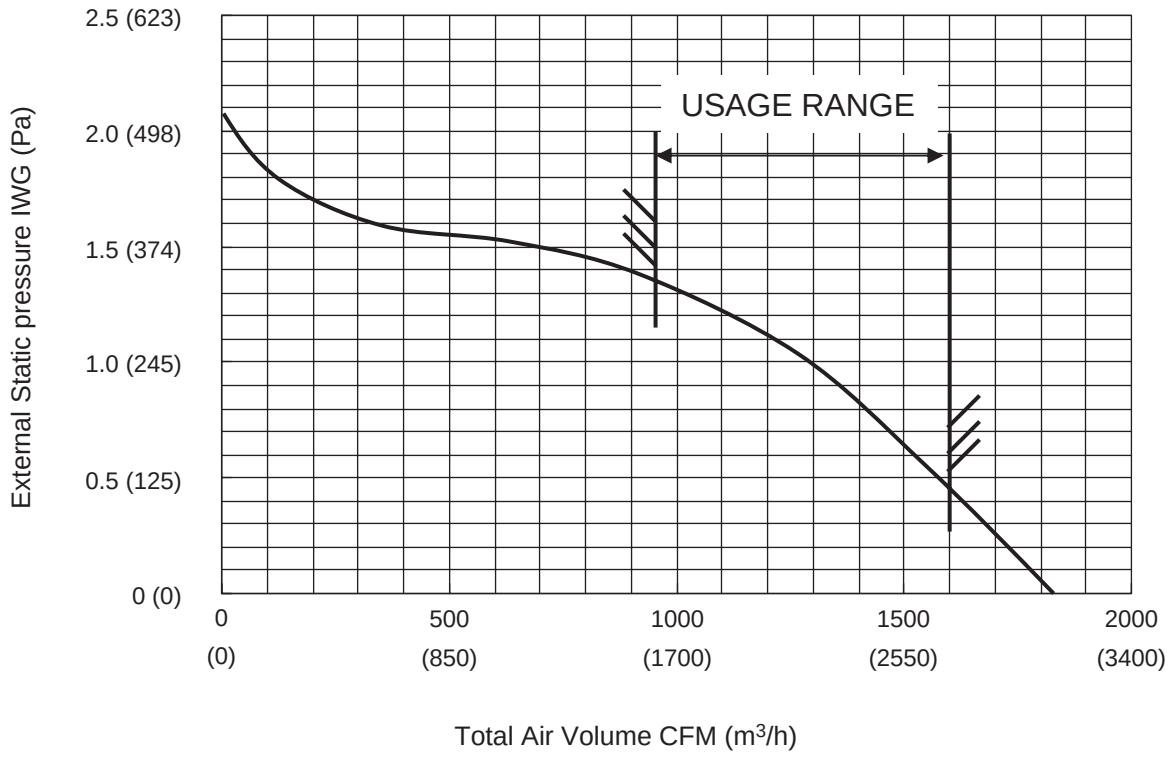

I003051

3. CONSTRUCTION

3.1 Internal Structure

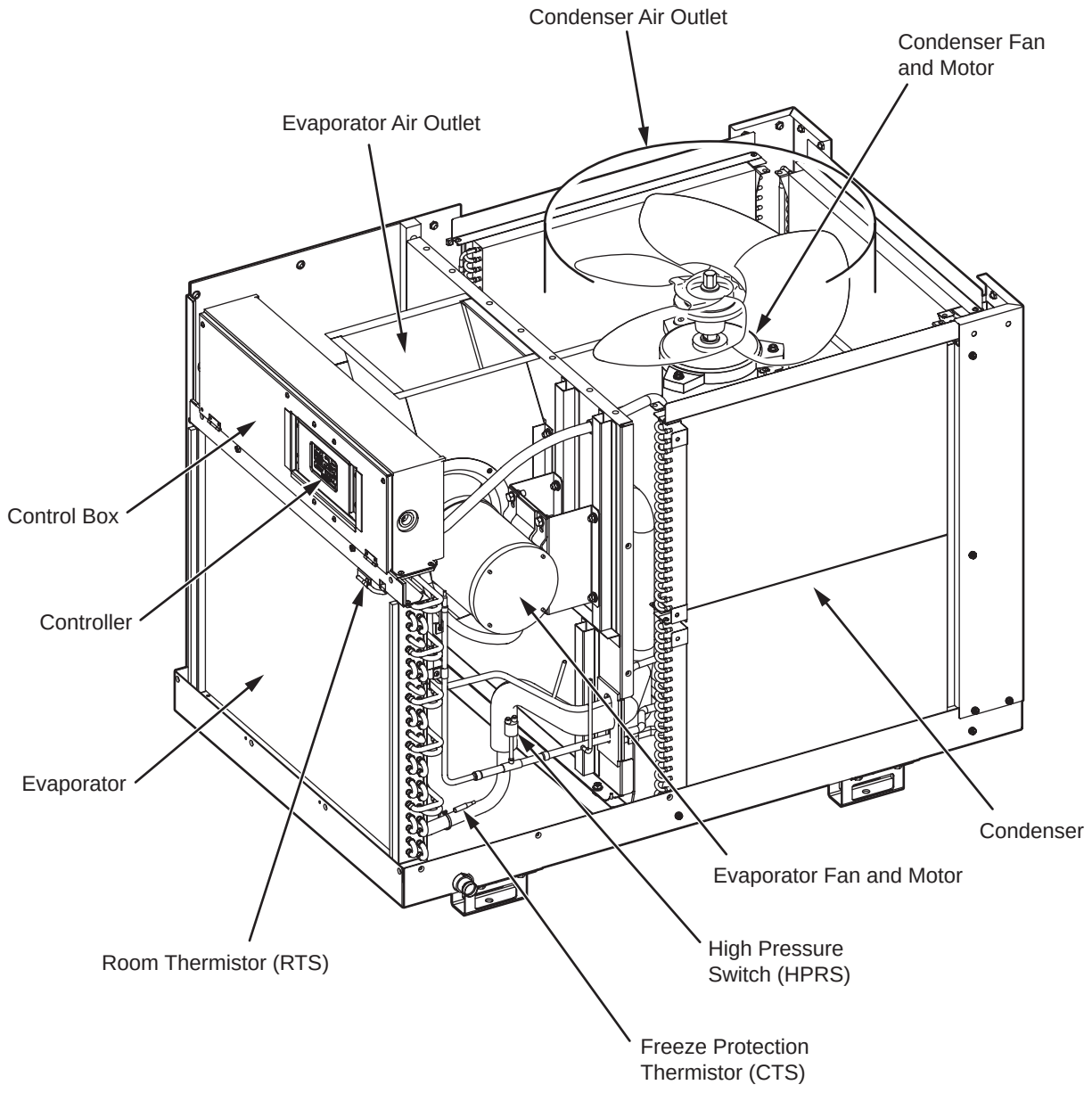

3.2 Basic Construction

- The interior of Classic 60 is divided into two sections. The front section houses the evaporator and control box, and the rear section houses the condenser and the compressor.

3.3 Air Flow

(1) Air flow for the condenser

- Air drawn from the sides and rear inlets passes through the condenser which extracts the heat. This hot air is blown out through the exhaust air duct on top of the unit.

(2) Air flow for the evaporator

- Air drawn from the front inlet passes through the evaporator and is cooled. This cool air is blown out through the upper outlet on top of the unit.
- Cooling air duct (optional) can be installed to cool the object.
- All air inlets are provided with air filters.

⚠ CAUTION

The Classic 60 should always be placed on the floor. It should not be hung from the ceiling.

4. REFRIGERANT SYSTEM

4.1 Refrigerant System Construction

The component parts of the refrigerant system include the following:

- Compressor, Evaporator, Condenser, Capillary tube

  The parts above are all connected by copper pipes with brazed connections.

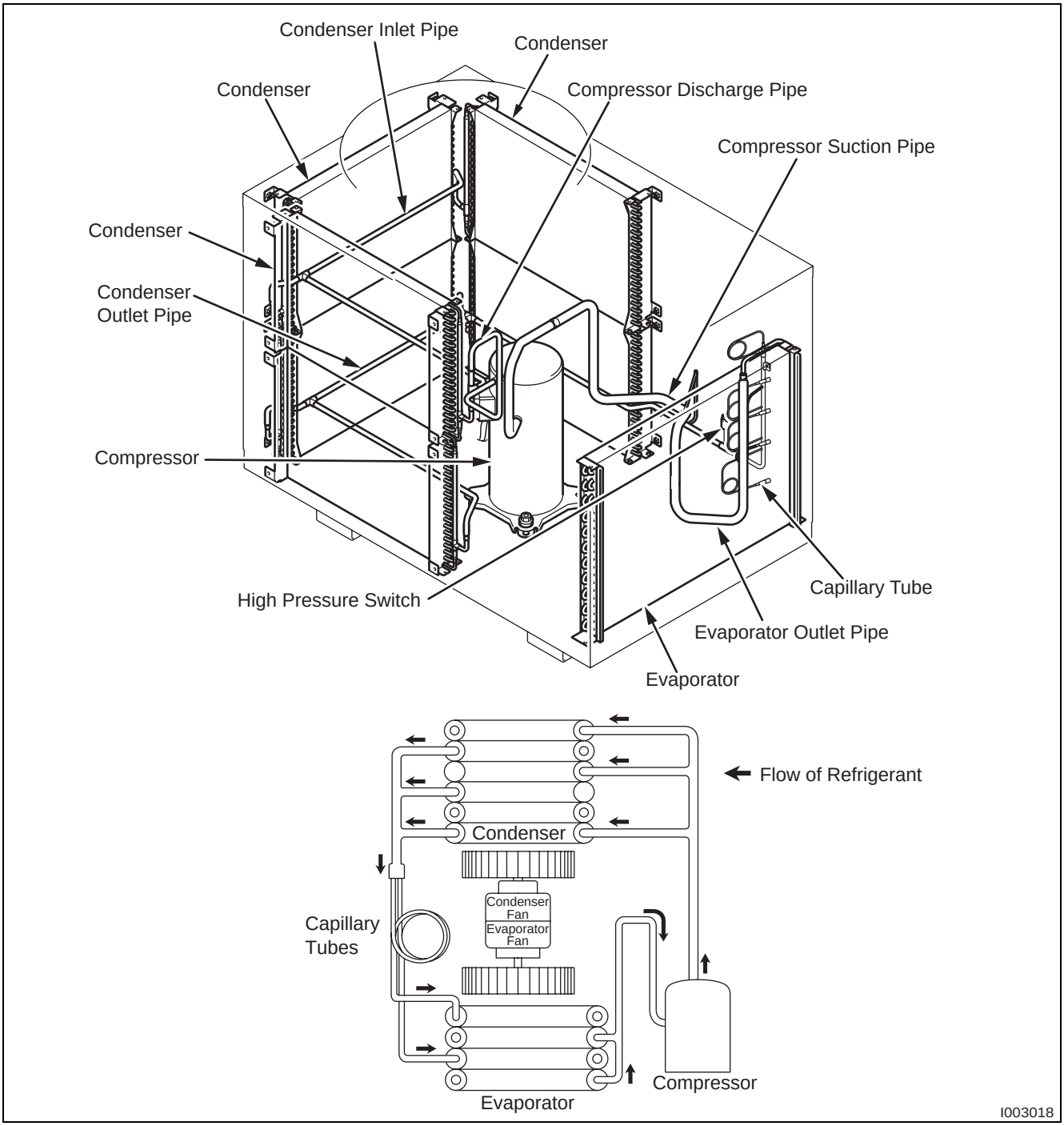

4.2 Compressor

- The compressor used for the unit is hermetically sealed. The compressor and the compressor motor are in one casing.

(1) Compressor theory of operation

- The scroll utilizes an involuted spiral which, when matched with a mating scroll form, generates a series of crescent-shaped gas pockets between the two members. During compression, one scroll remains stationary (fixed scroll) while the other form (orbiting scroll) is allowed to orbit (but not rotate) around the first form. As this motion occurs, the pockets between the two forms are slowly pushed to the center of the two scrolls while simultaneously being reduced in volume. When the pocket reaches the center of the scroll form, the gas, which is now at a high pressure, is discharged out of a port located at the center. During compression, several pockets are being compressed simultaneously, resulting in a very smooth process. Both the suction process (outer portion of the scroll members) and the discharge process (inner portion) are continuous.

(2) Compressor operation

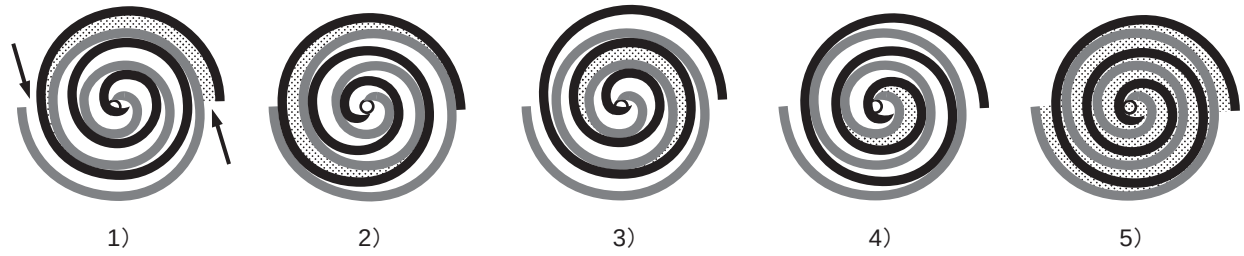

1) Compression in the scroll is created by the interaction of an orbiting spiral and a stationary spiral. Gas enters the outer openings as one of the spirals orbits.
2) The open passages are sealed off as gas is drawn into the spiral.
3) As the spiral continues to orbit, the gas is compressed into two increasingly smaller pockets.
4) By the time the gas arrives at the center port, discharge pressure has been reached.
5) Actually, during operation, all six gas passages are in various stages of compression at all times, resulting in nearly continuous suction and discharge.

< NOTE >

When the compressor shuts off, the compressor motor may run backward for a moment or two until internal pressures is equalized. This has no effect on compressor durability but may cause an unexpected sound after the compressor is turned off and should not be diagnosed as a malfunction.

4.3 Condenser

- The condenser is a heat exchanger with copper tubes that are covered with thin aluminum projections called plate fins.
- Heat is given off and absorbed by air being pulled across the condenser fins by the propeller fan. The air is then expelled through the exhaust air duct.

4.4 Capillary Tube

- The capillary tube is a long thin tube that utilizes line flow resistance as an expansion valve. The length and the inner diameter of the capillary tube are determined according to the capacity of the refrigeration system, operating conditions, and the amount of refrigerant. The high pressure, high temperature liquid refrigerant sent from the condenser expands rapidly as the refrigerant is sprayed out through the fixed orifice in the capillary tube. As a result, the temperature and state of the refrigerant becomes low and mist-like, and therefore evaporates easily.

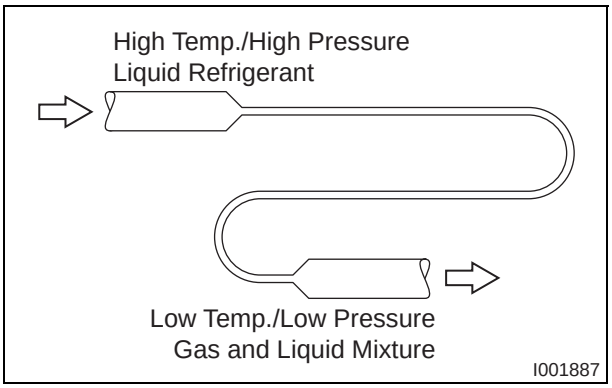

4.5 Evaporator

- The evaporator is a heat exchanger covered with plate fins. Heat is removed from the air being pulled across the evaporator by the centrifugal fan. The resulting cool air is expelled through the cooling air ducts.

4.6 High Pressure Switch

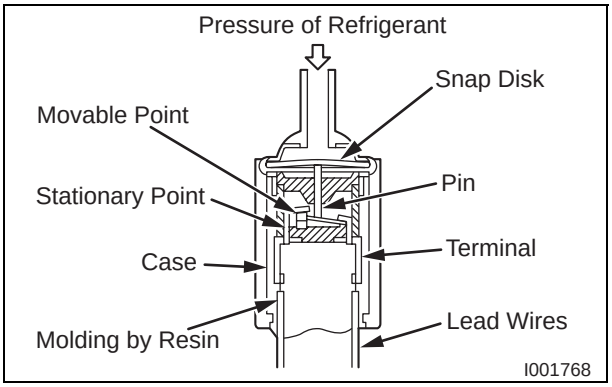

- The high pressure switch prevents the condenser and compressor from being damaged by excessively high pressure in the high pressure line of the refrigeration cycle. The switch is normally closed. The snap disk responds to the variations in pressure and, if pressure is abnormally high, the snap disk moves down to push the pin down, causing the internal contacts to open. This interrupts the ground signal at the control board (CN13 connector) which turns the compressor off.
- Possible causes of this trouble include:
  - The condenser air filter is dirty, restricting air flow.
  - The condenser blower is defective.

5. ELECTRICAL SYSTEM

5.1 Circuit Diagram

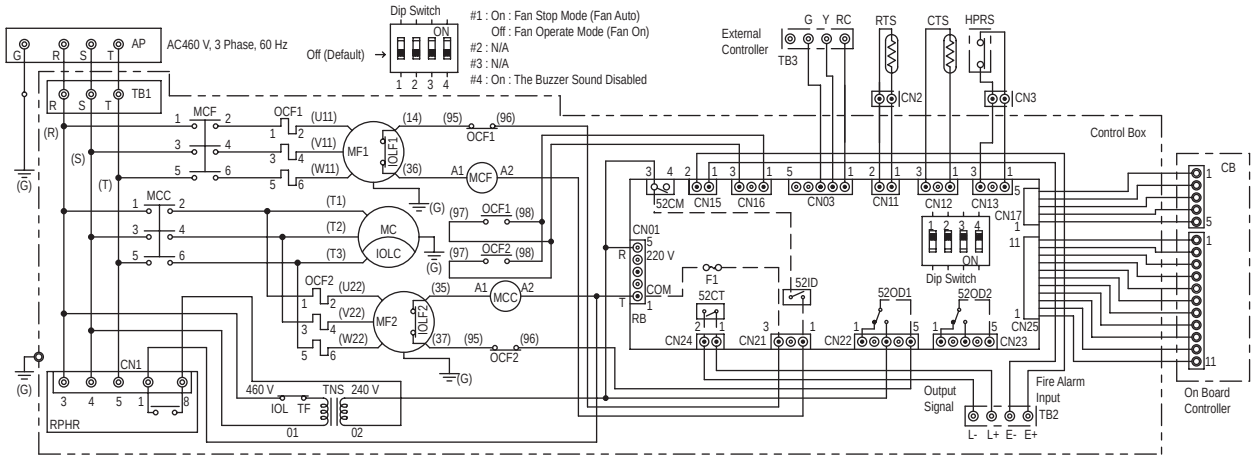

AP	Attachment Plug	RB	Relay Board
TB1	Terminal Block	CN1	Connector for RPHR
TB2	Terminal Block	CN2	Connector for RTS
TB3	Terminal Block	CN3	Connector for HPRS
MF1	Evaporator Fan Motor	RTS	Room Thermistor
MF2	Condenser Fan Motor	CTS	Freeze Protection Thermistor
RPHR	Reverse Phase Protector	CB	Control Board
MCF	Fan Motor Relay	TNS	Transformer
MCC	Compressor Motor Relay	G	Grounding
HPRS	High Pressure Switch	IOLF1	Inner Overload Relay of MF1
OCF1	Overcurrent Relay MF1	IOLF2	Inner Overload Relay of MF2
OCF2	Overcurrent Relay MF2	IOLC	Inner Overload Relay of Compressor
MC	Compressor Motor		

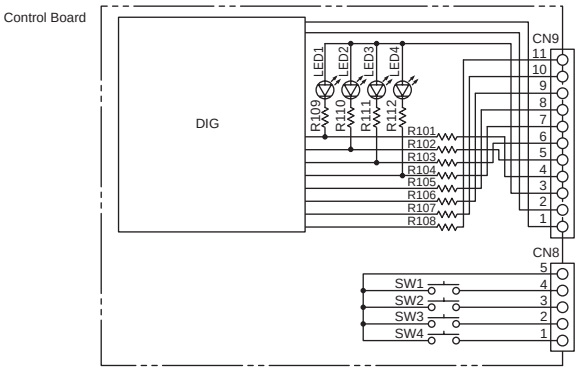

SW1	COOL ON/OFF Switch
SW2	FAN Switch
SW3	SET TEMP ▽ Switch
SW4	SET TEMP △ Switch

I003019

5.2 Control Box and Relay Board

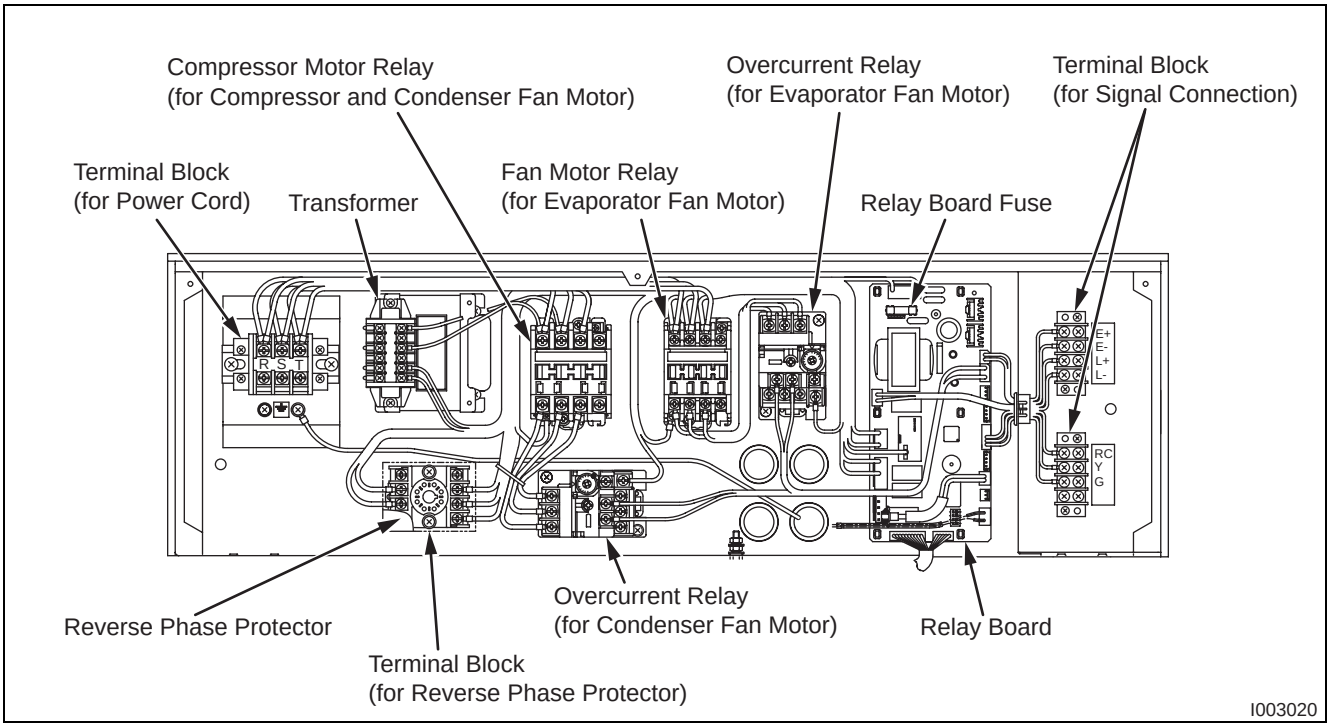

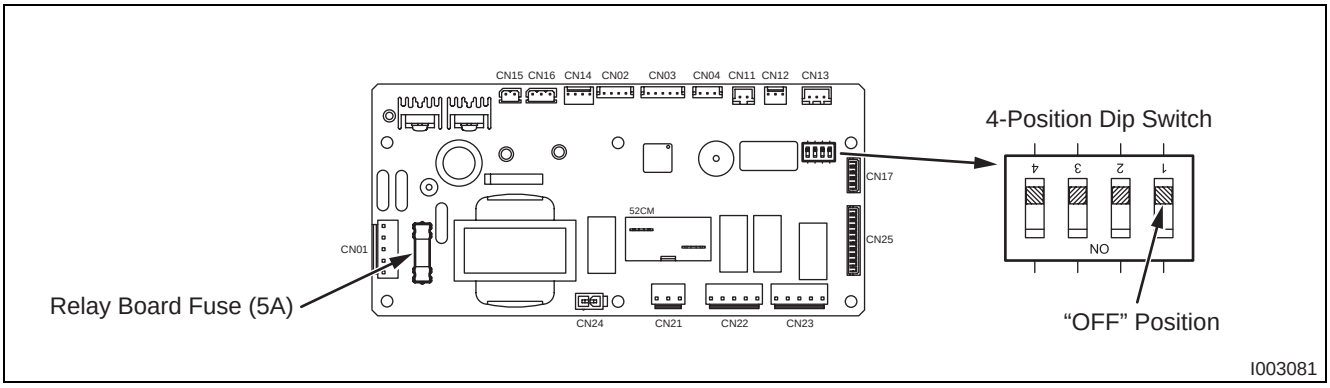

5.3 Power Supply Requirements

(1) Power supply

- AC 460 V ± 10 %, 3 phase and 60 Hz. Do not connect the unit to any other power supply.
- The power supply should be a dedicated single outlet circuit with a UL approved short-circuit and ground fault protective breaker with a recommended fuse size of 20 A (20 A maximum).
- Securely tighten each terminal.

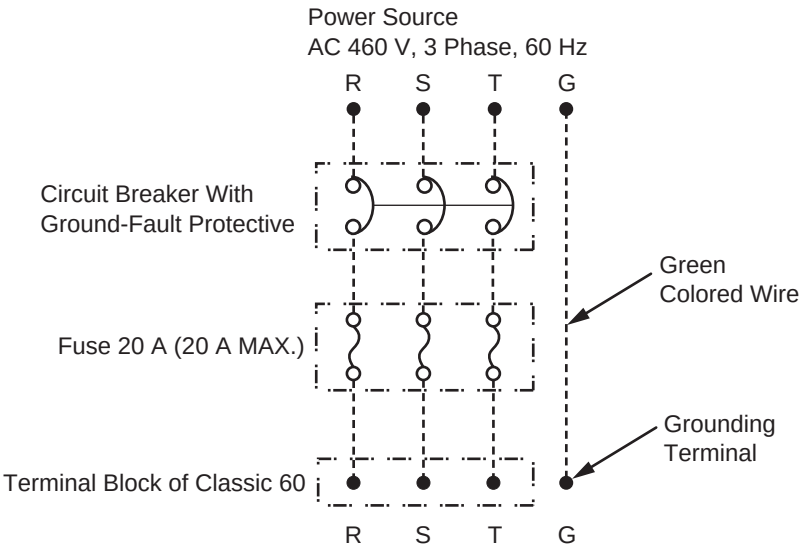

I003021

⚠ CAUTION

Use a specified 20 A fuse. Do not use wiring, copper wire or soldering instead of the fuse. The use of non-specified fuses can cause machine failure or fire.

(2) Power supply wires

- Use at least 12 AWG for the power wires.
  Cord type (4 wires): SO, SOT, SOOW or equivalent
  Voltage rating: 600 V Minimum
  Heat resistance: 140 °F (60 °C) or above
- Prepare three power wires for power lines and one wire (green) for grounding.
- Make sure to use conduit tubing when installing power wires.

(3) Connection to unit

1) Remove three (3) screws from the upper panel on the control panel side and open the upper panel.
2) Pass the power wire through the conduit hole in the left side panel.
3) Attach the conduit tubing to the conduit hole. Trade size of conduit is 1/2 inch.
4) Connect the power wires to the R, S, T and Grounding terminal.
   Tightening torque: 0.96 ft•lbf (1.3 N•m)

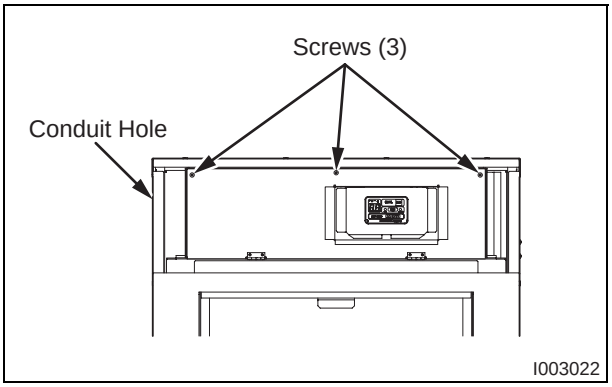

< NOTE >

- Classic 60 is equipped with phase protectors.
  - The phase sequence is in order of R, S, and T. If the phase sequence is reversed, the unit does not operate. At this condition, exchange two of the power wires for R, S and T terminals.
  - Do not use an extension cord on a cord connected unit.

⚠ WARNING

All electrical work, should only be performed by qualified electrical personnel. Repair to electrical components by non-certified technicians may result in personal injury and/or damage to the unit.

5.4 Wall Thermostat Connection

(1) Connecting wall thermostat to unit

1) Set the wall thermostat to cooling system mode, since most wall thermostats are designed for both heating and cooling.
2) Prepare the wire harness for connection from the unit to the thermostat.
   Recommended wire type and size: Thermostat cable / Solid wire 16 - 26 AWG
3) Identify the thermostat connectors labeled G, Y, and RC.
   G (Fan On/Off), Y (Cooling On/Off) and RC (Cooling Transfer - Common)

Wall Thermostat Connector Name	Unit Connector Name	Function
RC	RC	Common
Y	Y	Cool On/Off
G	G	Fan On/Off

4) Connect the wire harness from the terminal of the unit to the thermostat according to the labels shown below.

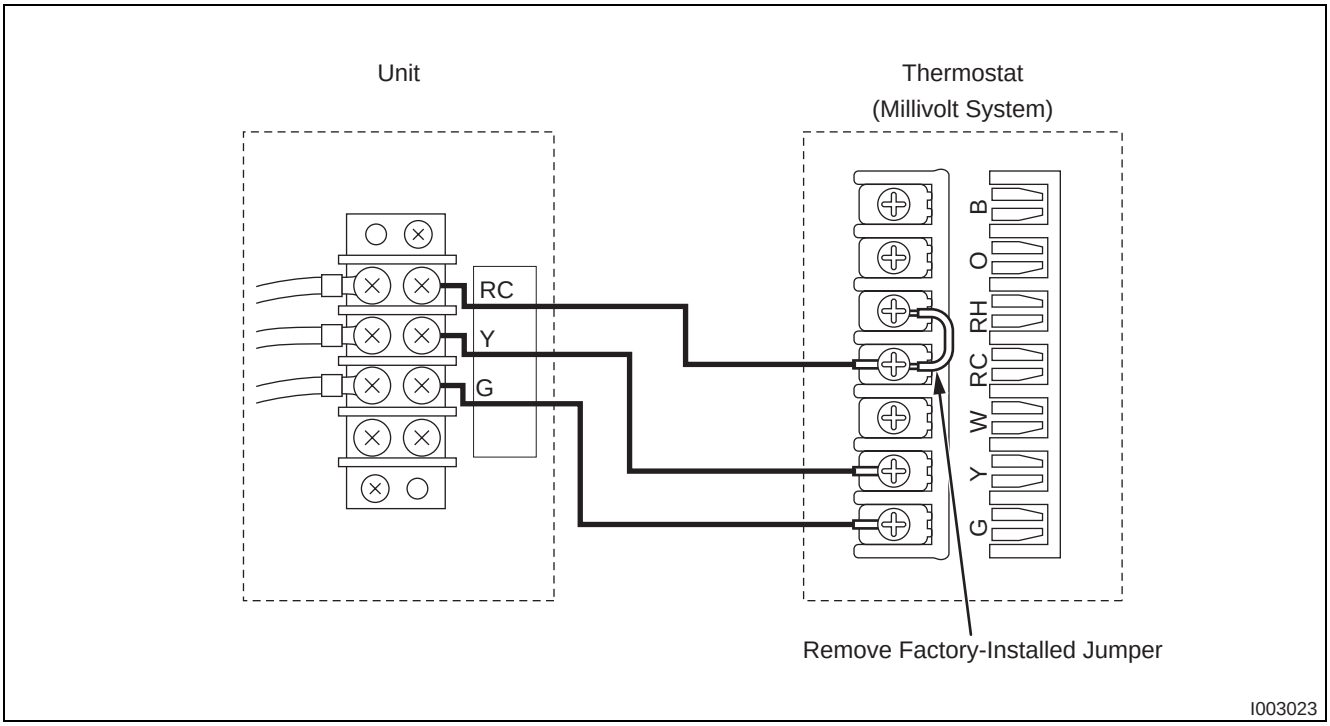

< NOTE >

Use thermostat that is compatible with millivolt system. Do not connect thermostat to AC power source.

5) Install the wall thermostat to the proper location inside the room where it can be conveniently accessed. Do not install the wall thermostat where unusual heating conditions may occur (i.e. hot stove, hot pipe, fireplace, direct sunlight, etc.)

Most thermostats provide these basic functions:

- Fan Mode: On / Auto (Select the desired fan mode)
- System: Cool / Heater (Select Cool only)
- For wall thermostat operation, see the operation manual supplied with the wall thermostat.

(2) Setting unit for wall thermostat connection

1) Press and hold FAN button, SET TEMP UP △ and DOWN ▽ buttons simultaneously to activate wall thermostat connection.
2) Press SET TEMP UP △ button to select “Sb” indicates on LED display for wall thermostat enable function. (“Ho” indicates on display for wall thermostat disable function.)
3) Press COOL button to set wall thermostat function. If COOL button is not pressed within 10 sec., the setting is automatically confirmed.

5.5 Warning Signal Connection (Output Signal Terminal L+ and L-)

- The controller is equipped with a warning signal output relay type (Form C, normal open dry contact) which can be used to monitor the failure condition.
- Relay contactor is closed when the unit operates abnormally.
- The relay output contactor is rated 2 A at 30 VDC or 2 A at 30 VAC (resistive load) and it is compatible with various warning devices such as alarm speaker, light indicators, etc.

< NOTE >

Use recommended warning signal wire size from 16 AWG to 26 AWG for a solid wire, or 16 AWG to 22 AWG for a stranded wire with ring terminal for #6 stud size.

- Connect the warning device to terminal L+ and L- according to its polarities.

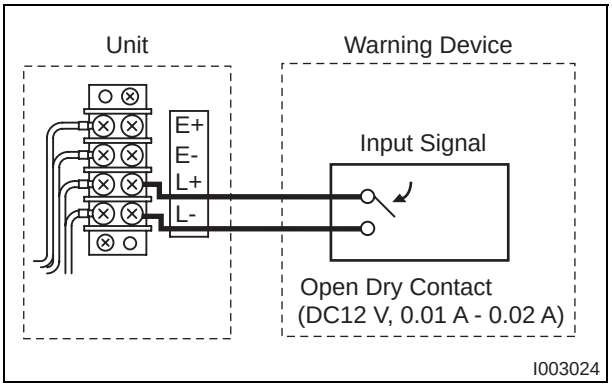

5.6 Fire Alarm Control Panel Connection (Input Signal Terminal E+ and E-)

- The controller is equipped with a normal open input signal connection, which can be connected directly from the fire alarm control panel. This input signal terminal should only be connected to a close or open dry contact signal. When receiving the signal from the fire alarm control panel, the unit turns off and does not turn back on until it has been RESET.

< NOTE >

Use recommended fire alarm signal wire size from 16 AWG to 26 AWG for a solid wire, or 16 AWG to 22 AWG for a stranded wire with ring terminal for #6 stud size.

- Connect the fire alarm device to terminal E+ and E- according to its polarities.

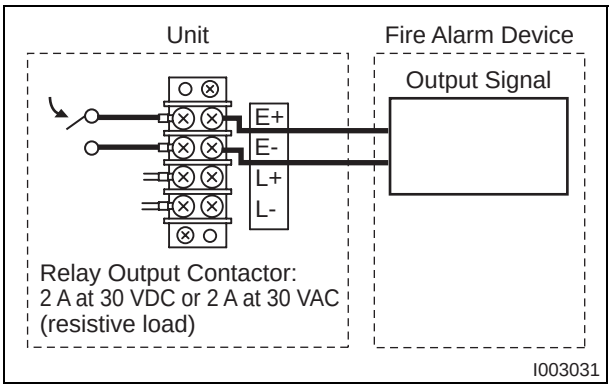

5.7 Basic Operation

(1) Control panel

- Before operating the unit, it is important to be familiar with the basic operation of the control panel.

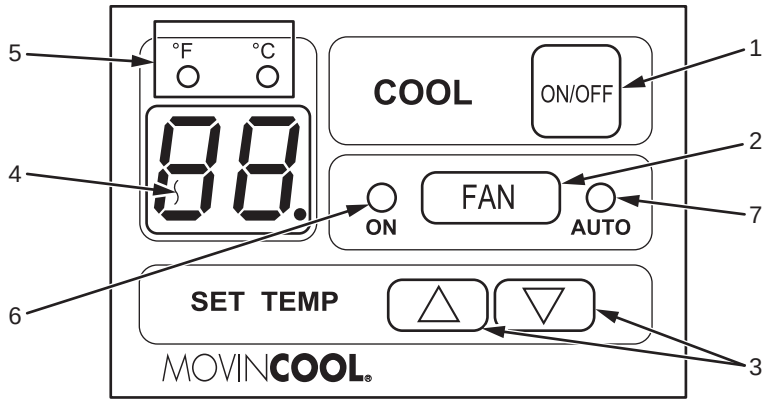

1	COOL ON/OFF Button	Activates/deactivates the cool mode; turns the unit off.
2	FAN Button	Activates/deactivates the fan only mode; turns the unit off.
3	SET TEMP Buttons (△/▽)	Increases/decreases the temperature set point during cool mode.
4	Room Temperature/ Set Point Display	Shows a blinking set point temperature for 5 sec, then continuously indicates room temperature.
5	Temperature Scale LED	Illuminates to indicate the current temperature being displayed is either in °C or °F.
6	ON LED	Illuminates during fan only mode and cool mode using fan operate mode.
7	AUTO LED	Illuminates during cool mode using fan stop mode.

[LED Display Indication] In normal operation, LED displays the following indication.

Display	Indication	Conditions
.	Right decimal segment is on	Power stand by or during fan only mode
0	Indicates wall thermostat enable function is set.	Lit during wall thermostat connection.
78	Indicates room temperature when display is solid. (Left fig. : Room temp. at 78 °F)	During cool mode
75	Indicates set point temperature when display is flashing. (Left fig. : Set Point temp. at 75 °F)	During set point temperature adjustment or cool mode on. (5 sec)

I003025

< NOTE >

- The room temperature display range is from 0 °F to 109 °F.
  (When displayed in "°C " the range is from -9 °C to 60 °C)
- In Fahrenheit only, when the display value is greater than 99 °F, 100 °F, 101 °F, and 109 °F are displayed as "00", "01", and "09" respectively.

(2) Fan only mode

- When the FAN button on the control panel is pressed, the FAN “ON” LED illuminates, and the fan operates. At this time, the compressor is off, and only the fan is in operation. When the FAN button is pressed again, the fan stops.

(3) Cool mode

- When the COOL ON/OFF button is pressed, the FAN “ON” LED illuminates, and room temperature is shown on the display. At this time, the compressor and fan begin to operate to provide cooling. When the COOL ON/OFF button is pressed again, the compressor and fan stop.
- When the COOL ON/OFF button is pressed in fan only mode, room temperature is shown on the display, and the compressor operates to provide cooling. If room temperature reaches the set temperature during cooling operations, the compressor stops, and only the fan continues to operate. (Fan operate mode: * Initial setting)

< NOTE >

The fan only mode will not operate after the cool mode has been activated. Once the cool mode is activated, the unit cannot be turned off by pressing the fan button. Rather, the COOL ON/OFF button must be pressed.

***Fan stop mode**

- In fan stop mode, if room temperature reaches the set temperature during cooling operations, both the compressor and fan stop. The fan stop mode setting can be changed using the dip switch on the relay board. (For details, see “Dip switch setting” on page 33). During cooling operations when in the fan stop mode, the FAN “AUTO” LED illuminates.

(4) Change temperature mode “°C” and “°F”

- The temperature display can be switched between “°C” and “°F” by holding down the SET TEMP buttons (△, ▽) and the FAN button simultaneously for at least three sec.

(5) Diagnostic code

- Most of the diagnostic codes can be RESET by holding down the SET TEMP buttons (△, ▽) simultaneously for at least 3 sec. (For details, see “Self-Diagnostic Codes” on Page 42.)

5.8 Relay Board

- The relay board contains the compressor and fan on relays, in addition to a step-down transformer that converts the line voltage (215/220 VAC) to 12 V. This voltage is then converted from AC to DC and used for relay coil activation. The 12 V (DC) power is sent to the control panel assembly, further being reduced to 5 V for the system logic. Lastly, the relay board also contains the dip switch.

(1) Relay board fuse

- The relay board fuse is the only serviceable component on the relay board assembly. This fuse provides protection against damage to the step-down transformer. The fuse must be replaced with the exact same part, or a suitable equivalent.

Specifications:
- 5 A 250 VAC

⚠ CAUTION

Failure to use the exact same fuse may result in damage to the unit and/or components, and will also void the unit warranty.

(2) Input signal

- The relay board receives inputs from the control panel, sensors, and external devices to perform device control.

Control Panel Input

Symbol	Indication	Function	Connector
SW1	ON/OFF Button	On/off control for unit operation. Turns the unit on and off.	CN17
SW2	FAN Button	Changes the fan control mode between continuous and automatic on/off control.	
SW3	SET TEMP △ Button	Increases the set temperature.	
SW4	SET TEMP ▽ Button	Decreases the set temperature.	

Sensor Input

Symbol	Type	Specification			Connector
		Characteristic	“Short” Detection	“Open” Detection	
RTS	Room Thermistor	5 k ohm at 77 °F (25 °C)	181 °F (83 °C) or more	-29 °F (-34 °C) or less	CN11
CTS	Freeze Protection Thermistor	5 k ohm at 77 °F (25 °C)	181 °F (83 °C) or more	-29 °F (-34 °C) or less	CN12

External Input Signal Specification

Symbol	Signal	Specification	Function	Connector
E+, E-	Fire Alarm Input	On: Between 10 to 20 mA at DC12 V (Off: No signal)	On: Activates “Defect control” (Contact: Normally open) LED shows “AL”, Output signal “ON” On board buzzer sound	CN15
OCF1, OCF2	Thermal Relay Protection	On: Between 10 to 20 mA at DC12 V (Off: No signal)	Off: Activates “Defect control” (Contact: Normally closed) LED shows “FL”, Output signal “ON”	CN16
HPRS	High Pressure Switch	On: Between 0.5 to 1.0 mA at DC5 V (Off: No signal)	Off: 1) < 120 sec.: Compressor stops. 2) 120 sec.<: Compressor stops. LED shows “HP” output signal “ON”	CN13

(3) Dip switch setting

- The controller is equipped with a four position dip switch that defaults in the OFF position. The dip switch can be set to configure the following functions:

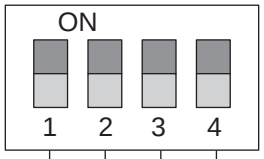

Symbol	Item	Function
DSW4	Buzzer	On --- Disable “onboard buzzer” Off --- Enable “onboard buzzer”
DSW3	-	N/A
DSW2	-	N/A
DSW1	Fan Mode	Change Fan Mode On --- Fan stop mode (Fan AUTO) Off --- Fan operate mode (Fan ON)

I002623

5.9 Control Specifications

(1) Fan control

- When the FAN button is pressed, the 52ID (fan motor on/off) relay on the relay board turns on, operating the fan.
- The 52ID relay turns the auxiliary relay on to operate the fan.

Specifications:

- 52ID (Fan motor On-Off) relay output: 5 A at AC 250 V

(2) Compressor start control

- When the ON/OFF button is pressed, the 52CM relay on the relay board turns on, operating the compressor.

Specifications:

- 52CM (Compressor On-Off) relay output: 20 A at AC 250 V

(3) Anti-freeze control

- Anti-freeze controls turns the compressor on and off by turning the 52CM relay on in accordance with the freeze protection thermistor (CTS) temperature. As a result, decreases in cooling performance due to frost buildup on the evaporator are prevented.
- Compressor off conditions: Freeze protection thermistor (CTS) temperature ≤ 28 °F (-2.2 °C)
- Compressor on (recovery) conditions: CTS temperature ≥ 60 °F (15.6 °C)

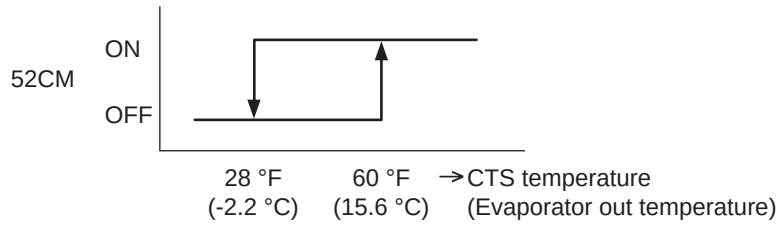

I003026

(4) Compressor time delay control (compressor protection)

- Compressor protection consists of a time delay program within the microprocessor. This program prevents a heavy load from being applied to the compressor motor when restarting the unit (cool mode) after a very short period of time. This “delay” is in effect any time the compressor is turned on by either the COOL ON/OFF button, or power interruption restart (automatic recovery.)

Specifications:

- Time Delay: 120 sec.

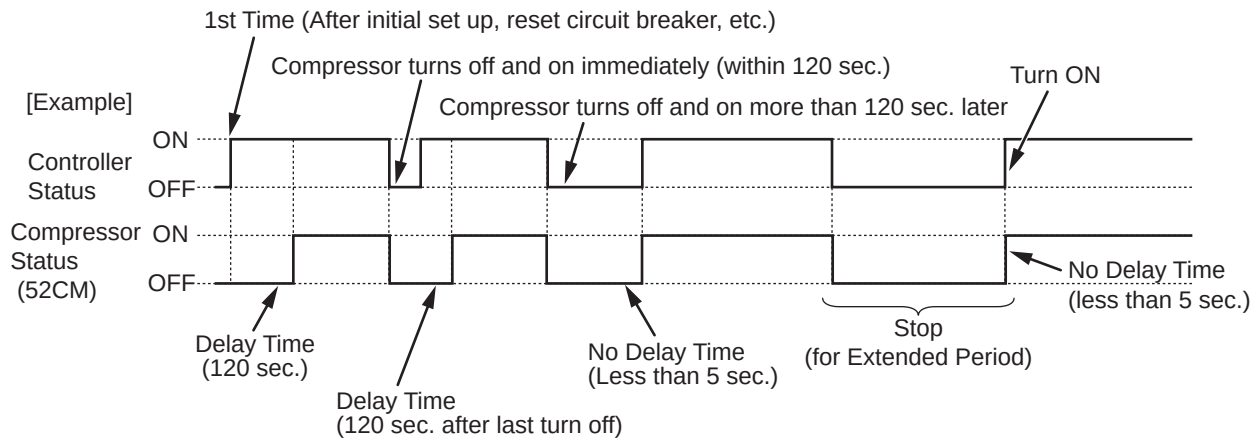

Reference: Initial turn on

Within: 120 sec. after (the power cord is connected to) the power supply, the compressor will start with delay timer.
After: 120 sec. since (the power cord was connected to) the power supply, the compressor will start without delay timer.

I001688

(5) Automatic restart and recovery function

- The microprocessor contains a feature that automatically restart the unit after power is lost and regained, and also has memory to store and recover operation status in the even of a power loss.

Status of memory during power interruption

- When the input power is off, the status items below are saved in the memory.
  - Running status (on or off)
  - Operating mode: Cool mode or fan only mode
  - Set temperature
  - Temperature mode (°F or °C)
  - Fan mode: Fan operation mode (fan on) or fan stop mode (fan auto)

(6) Temperature control

- During cool mode, temperature control changes the 52CM (compressor on/off) relay status according to RTS temperature in the available range (-4 °F to 140 °F (-20 °C to 60 °C)).

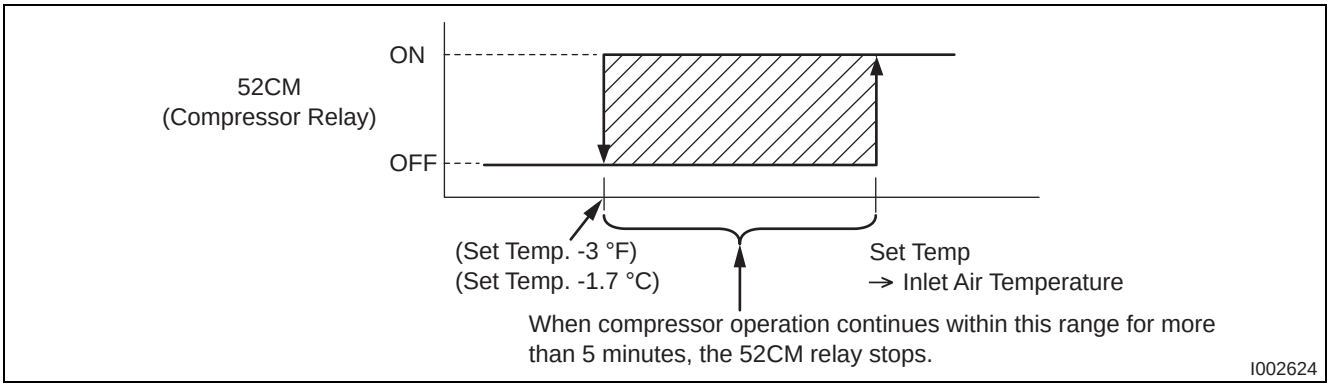

(7) Fire alarm signal control

- When receiving the signal from the fire alarm control panel, the buzzer sounds, and the 52CT (signal output) relay on the relay board turns on.

5.10 Compressor

(1) Compressor motor

- The compressor motor is a three-phase motor and is contained within the same housing as the compressor.

Specifications:

Rated Voltage	460 V
Rated Output	3890 W

(2) Compressor overload relay

- An internal compressor overload relay is used to protect the compressor motor. The relay interrupts the flow of current when there is an overload condition and, high temperature builds up in the compressor.

Operating Temperature		Trip Time in Seconds		
OFF (Open Contacts)	ON (Closed Contacts)	Current	Minimum	Maximum
257 °F (125 °C)	142 °F (61 °C)	49 A	2	10

5.11 Fan Motor

(1) For evaporator

- The fan motor is a three-phase, induction type.
- The following table shows the specifications of the fan motor.

Specifications:

Rated Voltage	460 V
Rated Output	750 W

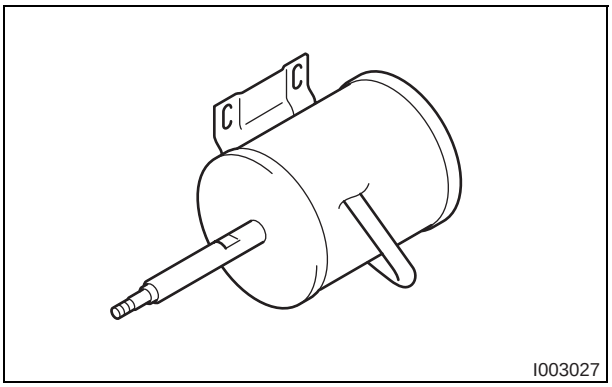

< NOTE >

An internal overload relay is used to protect the fan motor. This relay is built into the fan motor and interrupts the flow of current when abnormally high temperature builds up in the fan motor.

(2) For condenser

- The fan motor is a three-phase, induction type.
- The following table shows the specifications of the fan motor.

Specifications:

Rated Voltage	460 V
Rated Output	400 W

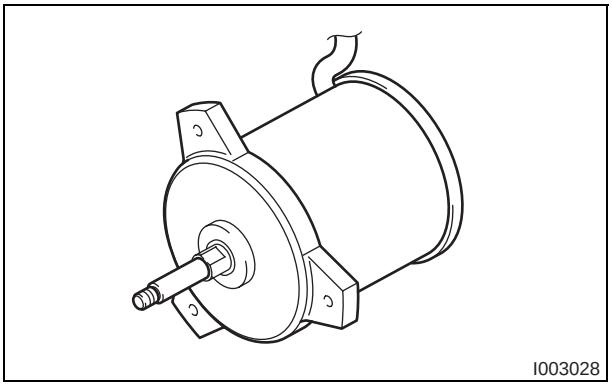

5.12 Transformer

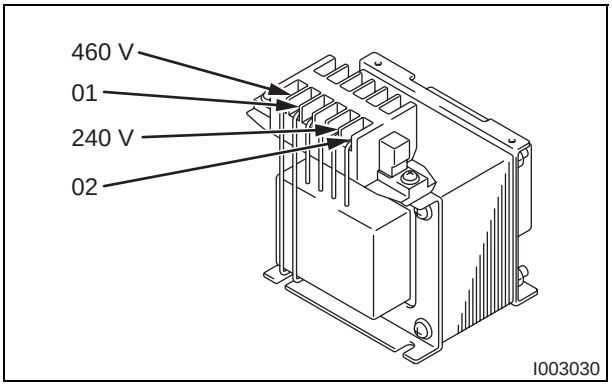

- The transformer is designed to convert 460 V to 215 V and supply power to the control circuit.
- An internal protector which activated at 248 °F (120 °C) is installed on the primary coil of the transformer, and will isolate the power supply when unusual temperature rises occur to prevent the coil from burning. Terminals 460 V and 01 are connected to 460 V power source to supply power to secondary side.
- Terminals 240 V and 02 of the secondary side provide 215 V power source.

Specifications:

- Primary Rated Voltage: 460 V
- Secondary Rated Voltage: 215 V
- Secondary Rated Current: 0.5 A

5.13 Control Box

(1) Reverse Phase Protector

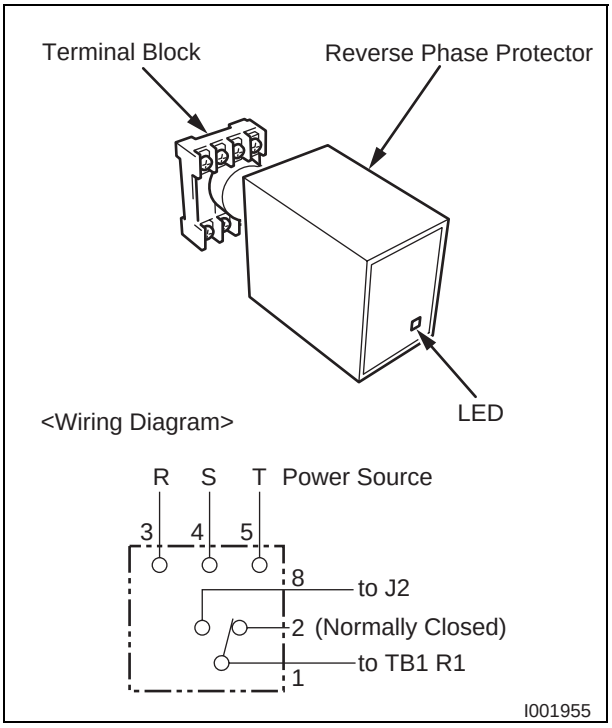

- The Reverse Phase Protector is operated at nominal voltage of 440 VAC to 480 VAC.
  The reverse phase protector is mounted on a plug-in socket terminal block where it can easily be plugged-in or removed during service.
- The internal relay of a reverse phase protector is energized and LED is on when the phase sequence is correct. If the phases are reverse, the out put relay will not energize.
- The reverse phase protector is reset automatically upon correction of the fault.

Specifications:

- Rated Line Voltage: 440/480 V
- Rated Output: 8 A resistive at 240 V
- Mounting: Plug-in socket (8 pin, octal plug)

5.14 Compressor Motor Relay

- The compressor motor relay is a normal open contact relay.
- When the unit is operating in COOL mode, the current is flowing through terminal A1 and A2 of the relay's coil and causes contactor terminals 1/L1 and 2/T1, 3/L2 and 4/T2, 5/L3 and 6/T3, 13 and 14 to become closed, and the power is supplied to compressor and condenser fan motor.

Specifications:

- Contact Rating: 600 V max., 30 A
- Coil Rating: 240 V max., 0.037 A

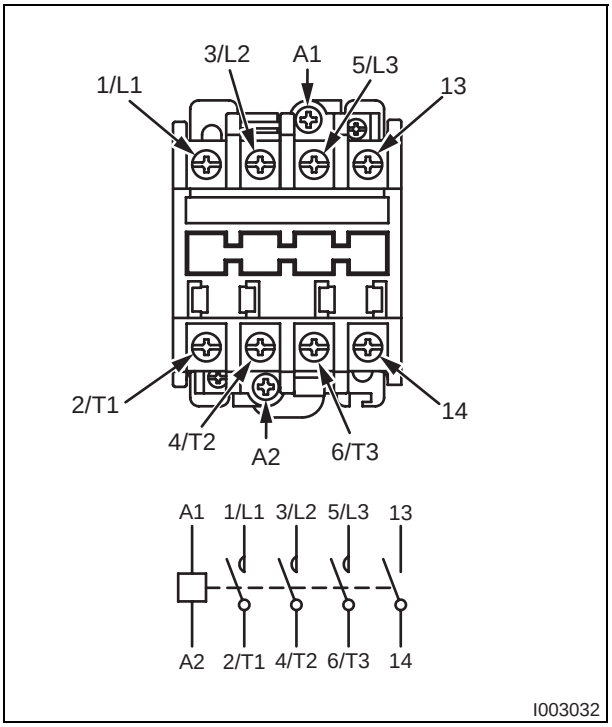

5.15 Fan Motor Relay

- The fan motor relay is a normal open contact relay.
- When the unit is operating, the current is flowing through terminal A1 and A2 of the relay's coil and causes contactor terminals 1 and 2, 3 and 4, 5 and 6, 13 and 14 to become closed, and the power is supplied to the evaporator fan motor.

Specifications:

- Contact Rating: 600 V max., 20 A
- Coil Rating: 240 V max., 0.037 A

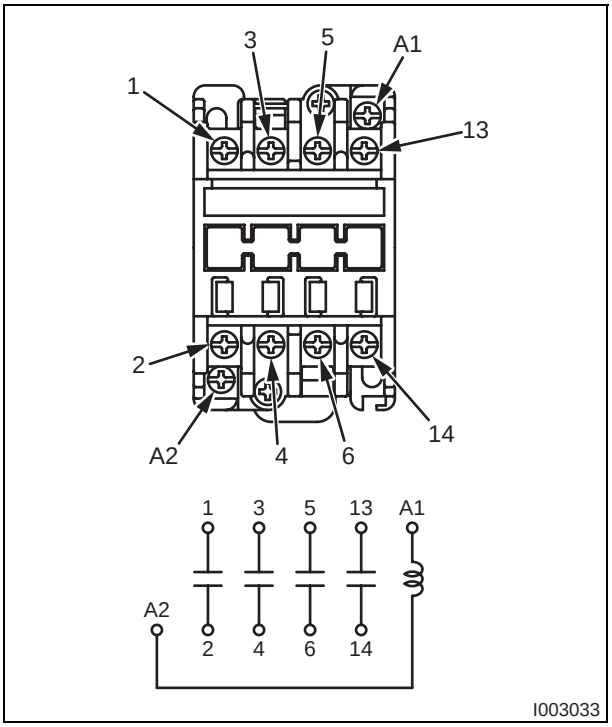

5.16 Overcurrent Relay

- For the three-phase fan motor, an overcurrent relay is usually used as a safety device. This prevents the motor coil from burning if an overcurrent situation has occured due to abnormal load on the fan motor, extraordinary change in supply voltage, or loss of current in one phase. If overcurrent flows into the heating coil wound around the bimetalic strip, the bimetalic strip curls, thereby opening the output contact (across terminals 95 and 96). This output contact shuts off the auxiliary relay circuit and brings the unit to a stop.
- Set the current dial according to the table shown below.

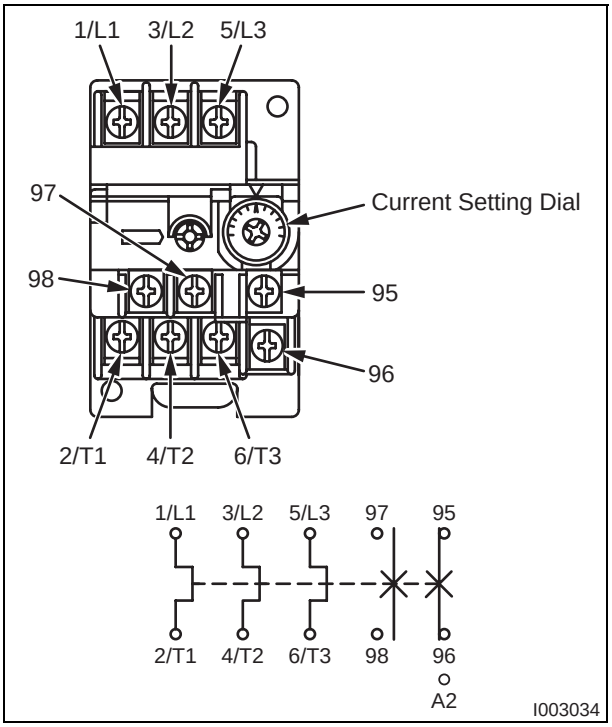

	Contact Rating	Tripping Current
For evaporator fan motor	240 V, 3 A	1.7 A
For condenser fan motor	240 V, 3 A	1.2 A

5.17 Temperature Thermistor

- The room thermistor (RTS) is installed upstream of the evaporator, and detects evaporator inlet temperature as a resistance value.
- The freeze protection thermistor (CTS) is installed in the evaporator outlet piping, and detects low temperature on the evaporator as a resistance value.

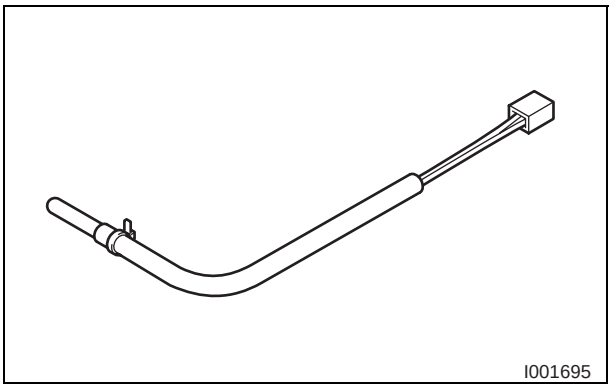

Type	Specification		
	Characteristic	“Short” Detection	“Open” Detection
Room Thermistor (RTS)	5 k ohm at 77 °F (25 °C)	181 °F (83 °C) or more	-29 °F (-34 °C) or less
Freeze Protection Thermistor (CTS)	5 k ohm at 77 °F (25 °C)	181 °F (83 °C) or more	-29 °F (-34 °C) or less

6. TROUBLESHOOTING

6.1 Troubleshooting

- Before troubleshooting the system, the following inspection should be performed.

(1) Inspection of power source voltage

- Check the voltage of the power source.
  - Three phase 460 V (60 Hz)
- Check the phase sequence of the power source.

< NOTE >

If the phase sequence is reversed, control panel display turns off. In this case, exchange any two wires out of the three wires to correct the phase sequence.

- Check the operation and condition of the fuse or circuit breaker in the power source.

(2) Inspection of air filters

- Remove the air filters and check the element. If the element is dirty, wash it as described in the OPERATION MANUAL supplied with the unit.

6.2 Self-Diagnostic Codes

- Self-diagnostic codes are displayed on the control board under the following conditions and clear method is as follows.

Controller Display	Description	Condition	Reset/Remedy
E1	Room thermistor connection problem	When room thermistor becomes open or shorted.	Disconnect and reconnect the room thermistor. If it does not work, replace room thermistor.
E2	Freeze protection thermistor connection problem	When freeze protection thermistor becomes open or shorted.	Disconnect and reconnect the freeze protection thermistor. If it does not work, replace freeze protection thermistor.
E4	Activation of protective device	When current of fan motor is abnormal (higher than relay's current setting value).	1) See "Trouble shooting chart" on page 45. 2) To Reset : Hold down the SET TEMP (△/▽) buttons simultaneously for 3 sec.
CF	Lose of cooling detection	When the room temperature minus the freeze protection temperature is less than 9 °F (5 °C) for 1 minute, and this condition occurs 3 times.	1) See "Trouble shooting chart" on page 45. 2) To Reset : Hold down the SET TEMP (△/▽) buttons simultaneously for 3 sec.
HP	Activation of high pressure switch	When high pressure switch is activated 3 times in 24 hr, "HP" blinks. When high pressure switch is activated 10 times in 24 hr, "HP" turns on.	1) See "Trouble shooting chart" on page 45. 2) To Reset : Hold down the SET TEMP (△/▽) buttons simultaneously for 3 sec.
AL	Detection of unit stop signal from fire alarm system	Input fire alarm signal from fire alarm system.	1) Check fire alarm signal off. 2) To Reset : Hold down the SET TEMP (△/▽) buttons simultaneously for 3 sec.

6.3 Troubleshooting Chart

- To accurately troubleshoot the problem, it is important to carefully confirm the nature of the problem. Typical problems are:
  - Insufficient cooling.
  - Unit does not start (operate).
  - Overflow of drain water.
  - Abnormal noise or vibrations.
  - Others.

(1) Insufficient cooling

- Cooling system problem generally results from electrical or mechanical components such as fan motor, compressor, control switch.

< NOTE >

- In this case, there is a possibility of safety device activating due to the clogged air filter. So make sure to first clean the air filter and then start up again to confirm if the problem lies with the air filter.
- Check the installation site for operating temperature and installation space (unobstructed airflow).
- Check the phase sequence of the power source.
  If the phase sequence is reversed, the control panel display, and reverse phase protector LED in the control box turn off.

Condition		Possible Cause		Remedy
		Checking Area	Cause	
Air volume normal	Compressor operates.	1. Usage conditions (high temperature).	Operation near usage limits.	Review the installation place.
		2. Dirt in condenser or evaporator.	Insufficient heat exchange.	Clean fins.
		3. Frost in refrigeration cycle.	Clogging at the frost section.	Replace the clogged section pipe.
		4. No temperature difference between evaporator and condenser.	Insufficient refrigeration.	Check the leaking part, then repair and charge refrigerant.
	Compressor does not operate.	1. Compressor coil resistance (0 ohm or ∞ ohm).	Short or open circuit.	Replace compressor (In case of short, check the compressor relay).
		2. Compressor motor relay.	Compressor motor relay does not work.	Replace compressor motor relay.
		3. Compressor relay on the relay board.	Open circuit or insufficient contact.	Replace relay board.
		4. Voltage.	Low voltage.	Repair power.
In sufficient air volume	No air.	1. Coil resistance of fan motor (0 ohm or ∞ ohm).	Short or open circuit.	Replace fan motor (In case of short, check the compressor relay).
		2. Fan motor relay.	Fan motor relay does not work.	Replace fan motor relay.
		3. Overcurrent relay.	Overcurrent relay does not work.	Replace overcurrent relay.
		4. Fan on-off relay on relay board.	Open circuit or insufficient contact.	Replace relay board.
	Insufficient air volume.	1. Air filter.	Clogged air filter.	Clean air filter.
		2. Evaporator.	Clogged evaporator or crushed fin.	Repair and clean fins or replace it.
		3. Duct connection state.	Leak or clogged by improper duct connection.	Repair duct connection.
		4. Duct length and diameter.	Too long or too small diameter of duct.	Fix duct.
		5. Fan motor.	Insufficient rotation.	Replace motor.
		6. Fan.	Fan interference.	Repair interference section.

(2) Unit does not start (operate)

Condition		Possible Cause		Remedy
		Checking Area	Cause	
Does not operate at all	Control Panel display turns off.	1. Voltage.	Power failure.	Repair power supply.
		2. Phase sequence of the power source.	Phase sequence is reversed.	Change any 2 of the 3 wires for power source wires.
		3. Ground fault breaker trip.	Ground fault or defective ground fault.	Repair ground fault section.
				Reset or repair breaker.
		4. Fuse.	Fuse blown.	Repair shorting section.
				Replace fuse on the relay board.
		5. Transformer.	Defective transformer.	Replace transformer.
		6. Reverse phase protector.	Open circuit or insufficient contact.	Replace reverse phase protector.
Control panel display turns on	Control Panel display shows error codes.	1. Display code “E1”.	Improper room thermistor connection.	Check connection.
			Defective room thermistor (short or open).	Replace room thermistor.
		2. Display code “E2”.	Improper freeze protection thermistor connection.	Check connection.
			Defective freeze protection thermistor (short or open).	Replace freeze protection thermistor.
		3. Display code “E4”.	Defective fan motor	Replace fan motor
			Defective overcurrent relay	Replace overcurrent relay
			See “Stops after running a while” of Troubleshooting on page 46.	
		4. Display code “CF”.	Defective compressor	Replace compressor
			See “Stops after running a while” of Troubleshooting on page 46.	
		5. Display code “HP”.	Improper high pressure switch connection.	Check connection.
			Defective high pressure switch (short or open).	Replace high pressure switch.
			See “Stops after running a while” of Troubleshooting on page 46.	
		6. Display code “AL”.	Input fire alarm signal from fire alarm system	Check fire alarm system

Condition		Possible Cause		Remedy
		Checking Area	Cause	
Stops immediately after starting	Control panel display normally.	1. Fan on-off relay on the relay board.	Open circuit or insufficient contact.	Replace relay board.
		2. Compressor motor relay.	Open circuit or insufficient contact.	Replace compressor motor relay.
		3. Compressor relay on the relay board.	Open circuit or insufficient contact.	Replace relay board.
		4. Reverse phase protector.	Open circuit or insufficient contact.	Replace reverse phase protector.
Stops after running a while	Control panel display normally.	1. Resistance of compressor.	Operation of safety device (IOLC) due to compressor malfunction.	See “Inspection of Compressor Motor” on page 50.
		2. Refrigerant leakage.	Insufficient refrigerant or gas leakage.	Repair and charge refrigerant.
		3. Dirt on evaporator or condenser.	Insufficient cooling of evaporator or condenser.	Clean evaporator or condenser.
		4. Duct connection state.	Leak or clogged by improper duct connection.	Repair duct connection.
		5. Duct length and diameter	Too much long or too small diameter of duct.	Fix duct.

(3) Abnormal noise or vibration

- To prevent abnormal noise or vibration, carefully determine the source of the problem and come up with proper countermeasures to solve the problem so that it does not occur again.

Condition	Possible Cause		Remedy
	Checking Area	Cause	
Abnormal noise or vibration.	1. Fan.	Fan interference.	Repair interfering section.
		Fan deformation.	Replace fan.
	2. Compressor fixing nuts.	Loose nuts.	Tighten nuts further.
	3. Piping.	Pipe interference.	Repair interfering section.
	4. Panel fixing screws.	Looseness of screws.	Tighten screws further.

6.4 Basic Inspection

- Perform the following inspection before disassembly.

(1) Inspection of plate fins

- To inspect the plate fins of either the evaporator or condenser, the air filter must be removed. After removal of the air filters, inspect the plate fins for any dirt, dust, lint, or debris that may have caused insufficient cooling performance of the unit. If cleaning of the fins is necessary, it is recommended that this service be performed by a qualified service technician.

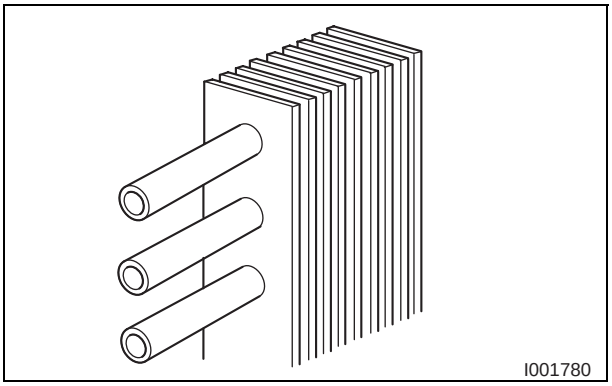

(2) Examination of operating environment

- Operating environments can vary depending on location, climate and surrounding conditions. Installation location also can cause operational problems. Consult your reseller concerning operational environment requirements.

(3) Inspection of cooling capacity performance

- Measure the difference in temperature between the inlet of the evaporator and the cool air vent. If the difference is out of the range given in the graphs on page 13, proceed with the remedy suggested in the troubleshooting chart on page 43 to 47.

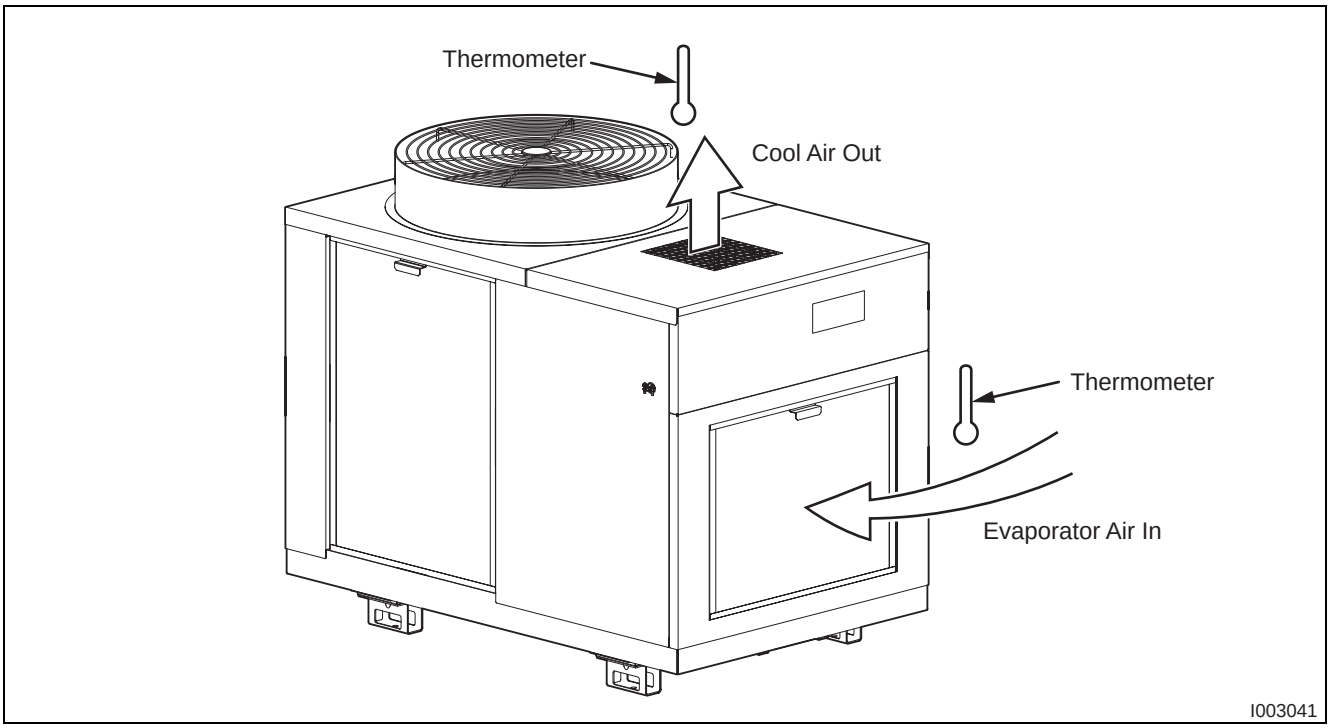

6.5 Inspection of Transformer

- Measure resistance across the terminals of the transformer. (All terminals must be disconnected from the unit.)
- Resistance value between terminals at 68 °F (20 °C)
  - 460 V to 01: 75.0 ohm
  - 240 V to 02: 27.0 ohm
- If the measured resistance is not equal to the standard values listed above, replace the transformer.

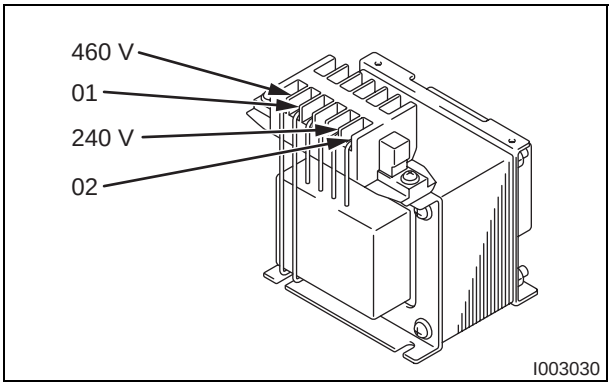

6.6 Inspection of Fan Motor

- Measure resistance across the terminals of the fan motor (except the ground terminal). (All terminals must be disconnected from the unit.)
  - Condenser fan motor: 46.6 ohm (at 68 °F (20 °C))
  - Evaporator fan motor: 24.7 ohm (at 68 °F (20 °C))
- If the measured resistance is not equal to the standard values listed above, replace the fan motor.

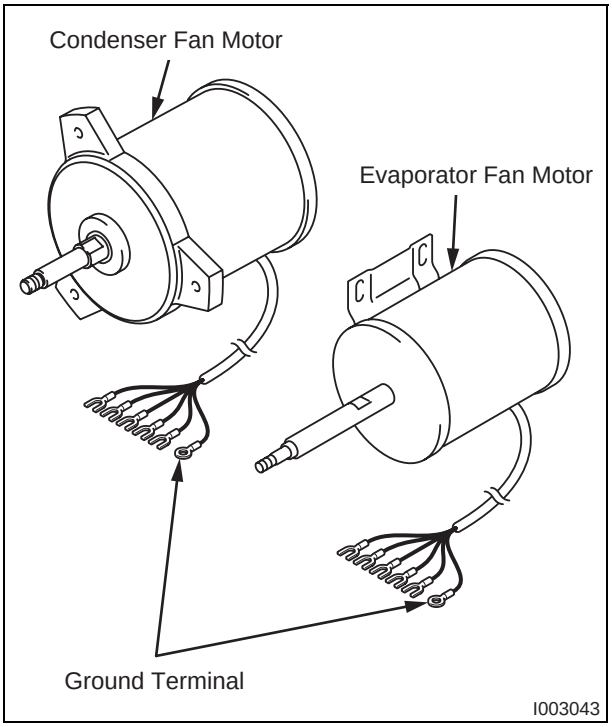

6.7 Inspection of Compressor Motor

- Measure resistance across the terminals of the compressor motor. (All terminals must be disconnected from the unit.)
- Between terminals (at 77 °F (25 °C))
  - R-C Approx. 0.4 ohm
  - C-S Approx. 0.6 ohm
  - S-R Approx. 0.9 ohm
- If the measured resistance is not equal to these standard values, replace the compressor. The overload relay is internal to the compressor.

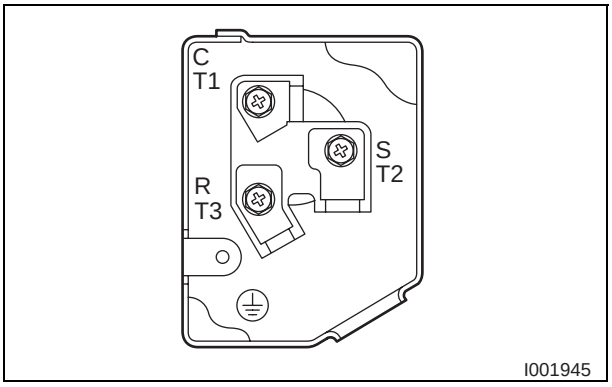

6.8 Thermistor Inspection

- Use an ohmmeter to check the resistance across the 2-pin connector at normal temperature (77 °F (25 °C)).

Type	Specification
	Characteristic
Room Thermistor (RTS)	5 k ohm at 77 °F (25 °C)
Freeze Protection Thermistor (CTS)	5 k ohm at 77 °F (25 °C)

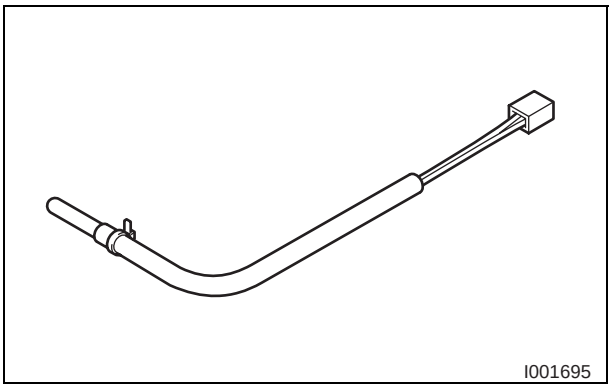

6.9 Wiring Connection Inspection

- While referring to the wiring diagrams, check the connection of each wire.

⚠ CAUTION

Secure the wires using clamps to prevent contact with the edges of the structure, etc. Secure the wires in the same position as prior to removal.

6.10 Refrigerant System Inspection

- In most cases, the probable cause for insufficient cooling is a clogged system, leakage or an incorrect amount of refrigerant. In such cases, inspect the system according to the following procedure.

(1) Inspection of clogged system

- Check the component parts of the refrigerant system, including piping, that could be clogged with refrigerant. If clogged with refrigerant, only the clogged part is frosted partially. In such a case, change the part in question.

(2) Inspection of refrigerant leak

- Carefully check all connections, and each component for leaks whenever the refrigerant system is installed or repaired. Use an electronic gas leak tester to inspect the system.

(3) Insufficient refrigerant

- In case the unit is judged to be deficient in cooling capacity, make sure to perform the inspections (1) and (2) described in “Repair of Refrigerant System” on page 62 to confirm the cause of trouble. Then, charge the system with refrigerant to the specified amount.

7. DISASSEMBLY

7.1 Parts Construction

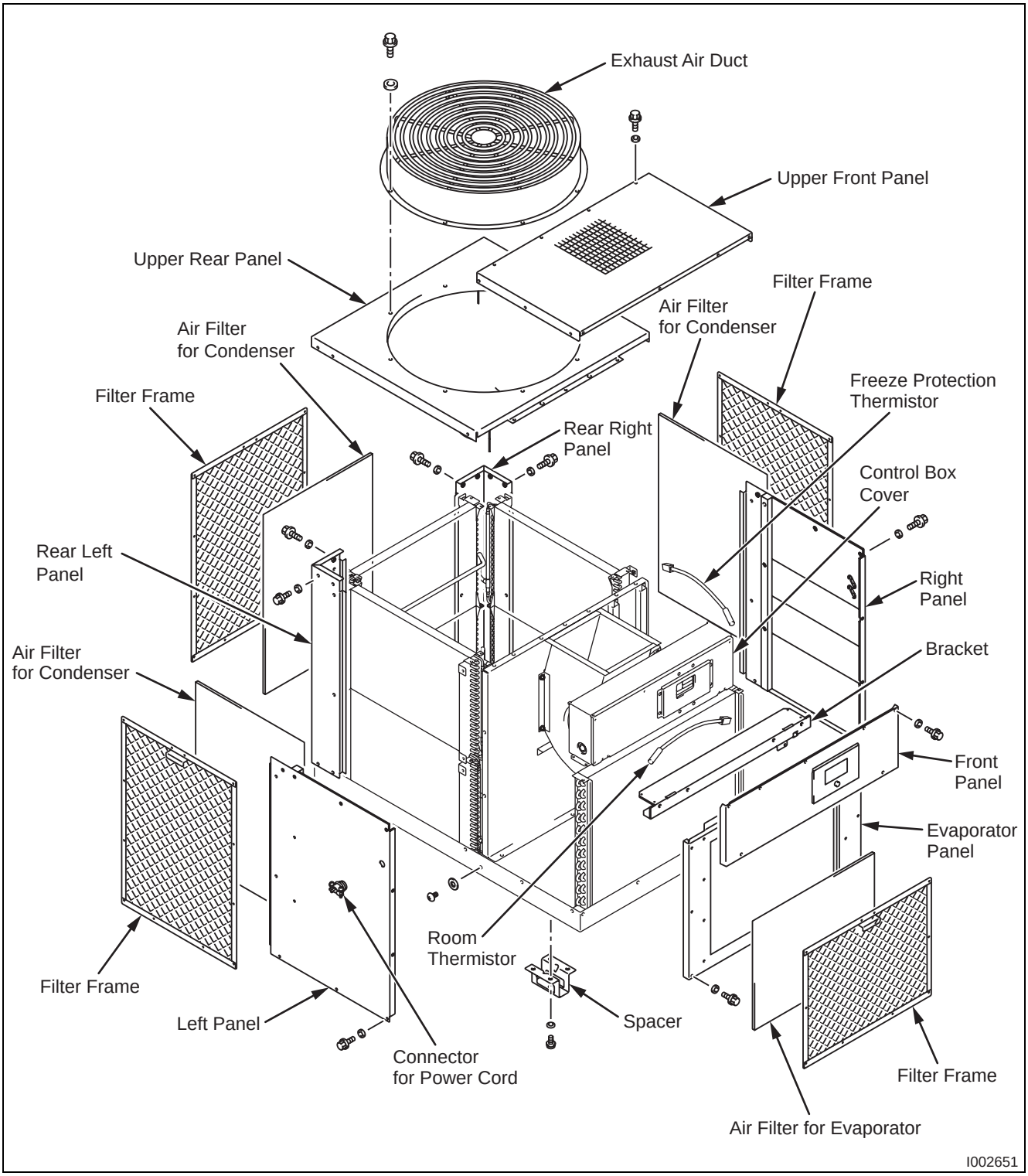

7.2 Disassembly

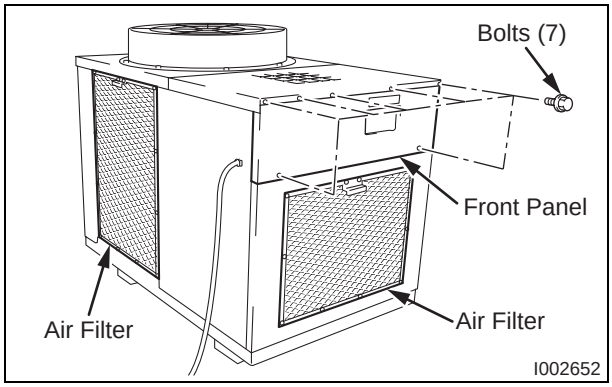

1) Remove the four air filters.

2) Take out the seven (7) bolts, and then remove the front panel.

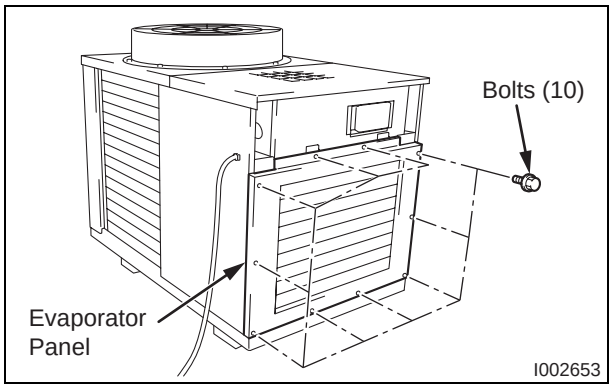

3) Take out the ten (10) bolts, and then remove the evaporator panel.

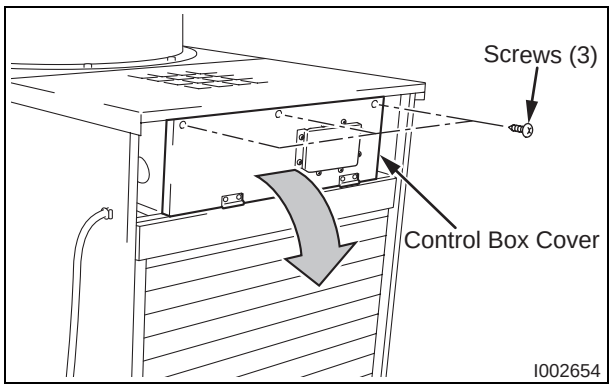

4) Take out the three (3) screws, and then open the control box cover.

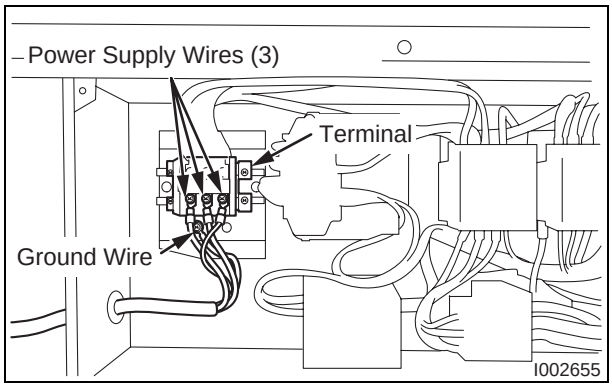

5) Disconnect the three (3) power supply wires from the terminal, and disconnect the ground wire.

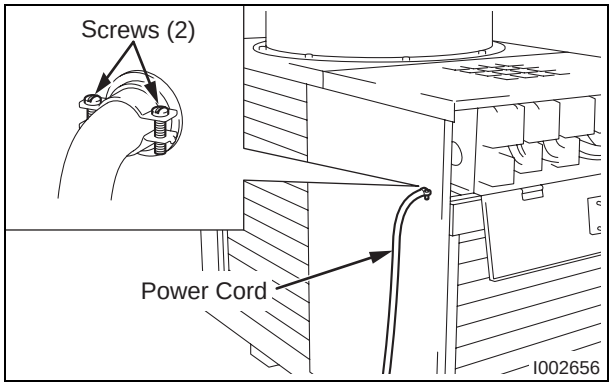

6) Loosen the two (2) screws, fixing the conduit and disconnect the power cord.

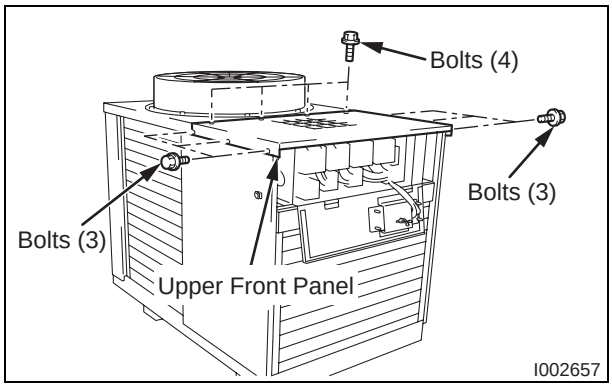

7) Take out the ten (10) bolts, and then remove the upper front panel.

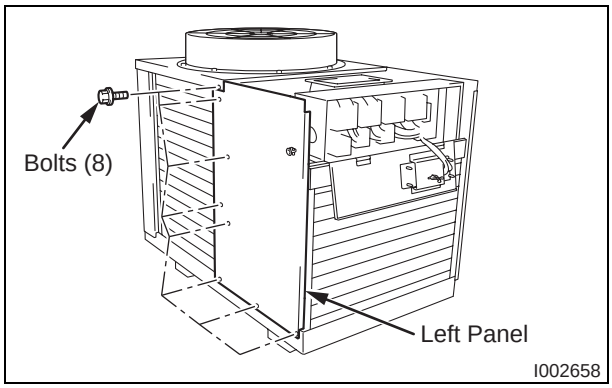

8) Take out the eight (8) bolts, and then remove the left panel.

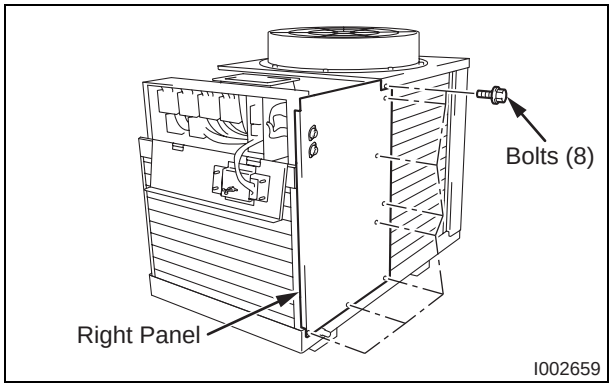

9) Take out the eight (8) bolts, and then remove the right panel.

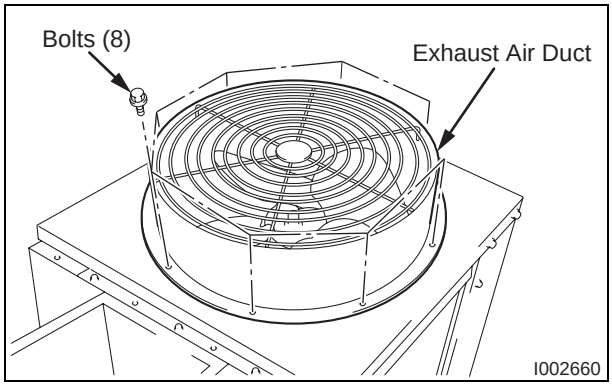

10) Take out the eight (8) bolts, and then remove the exhaust air duct.

7.3 Removal of Control Panel

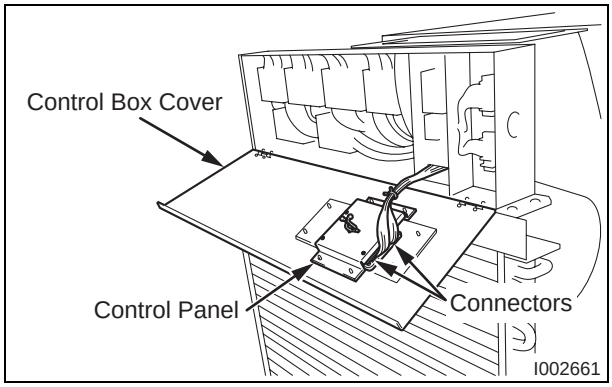

1) Disconnect the two connectors (11-pin, 5-pin) from the control panel.

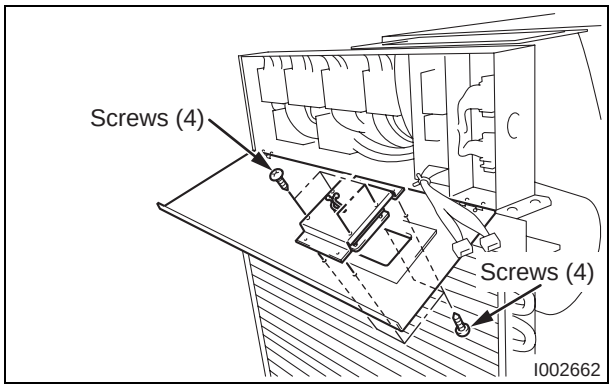

2) Take out the eight (8) screws, and then remove the control panel.

7.4 Removal of Condenser Fan Assembly

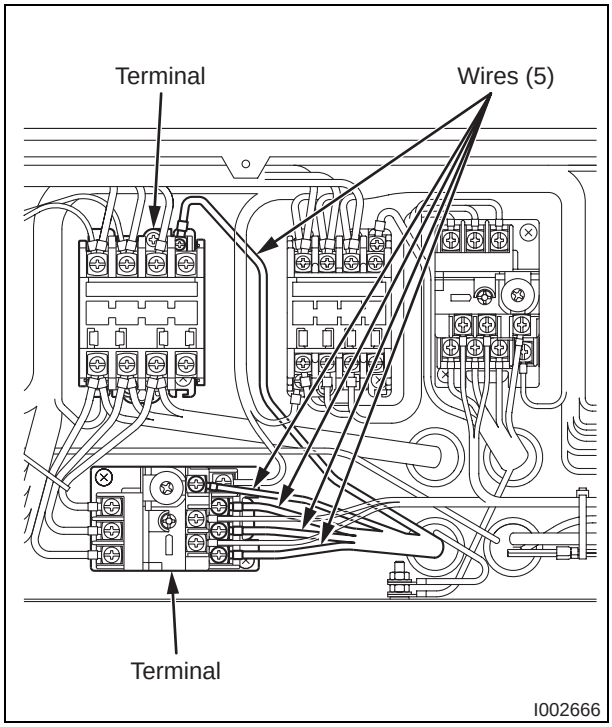

1) Disconnect the five (5) wires of the condenser fan motor from the terminals.

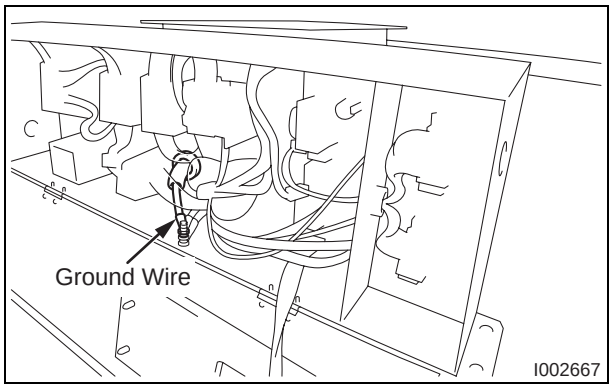

2) Disconnect the ground wire.

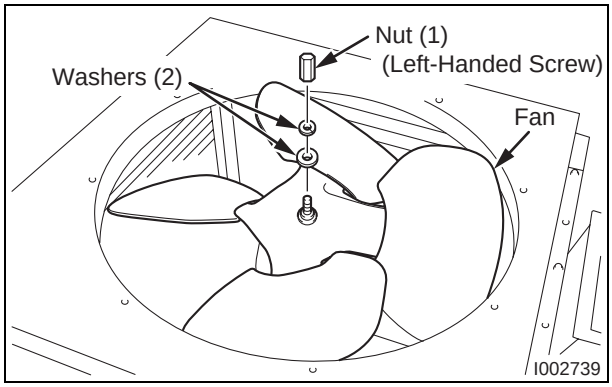

3) Take off the nut (left-handed screw) and two (2) washers, and then remove the condenser fan.

⚠ CAUTION

- Tightening torque (for installation):
  - 32.5 ± 3.6 ft•lbf (44.1 ± 4.9 N•m)

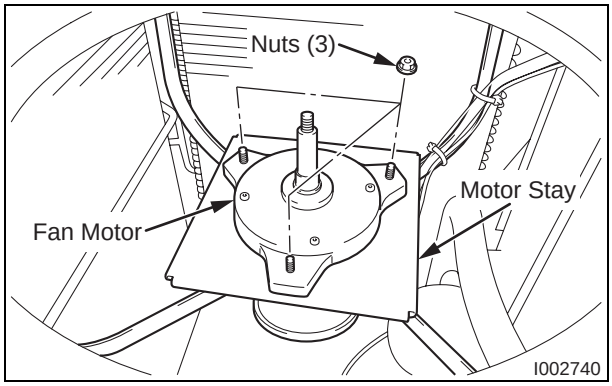

4) Take off the three (3) nuts, and then remove the condenser fan motor.

7.5 Removal of Evaporator Fan Assembly

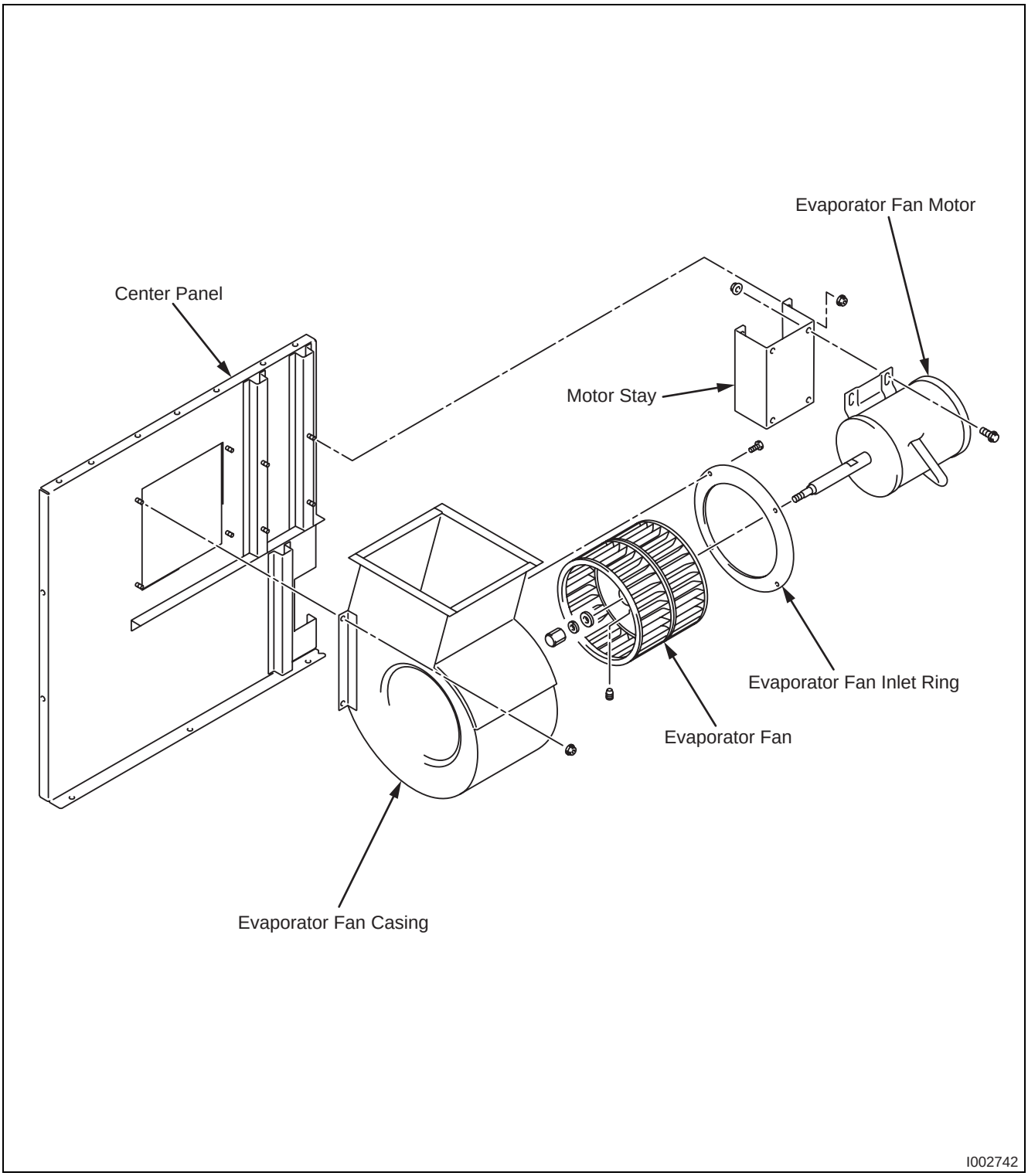

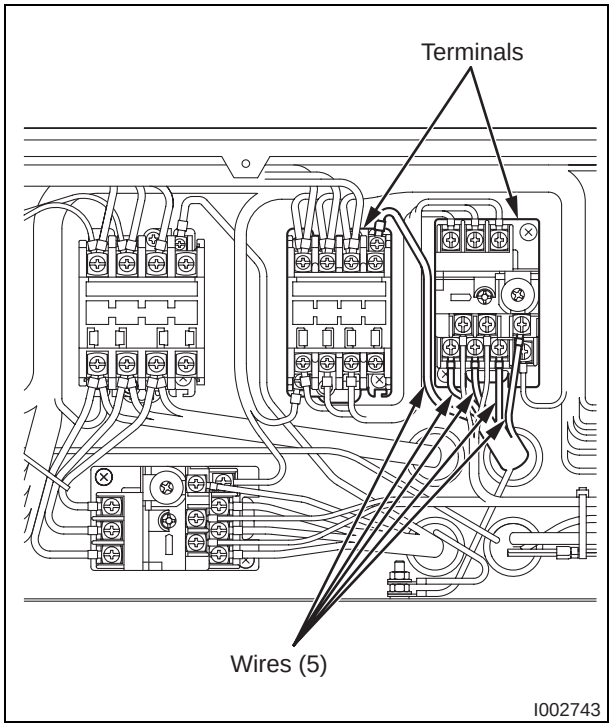

1) Disconnect the five (5) power supply wires from the terminals.

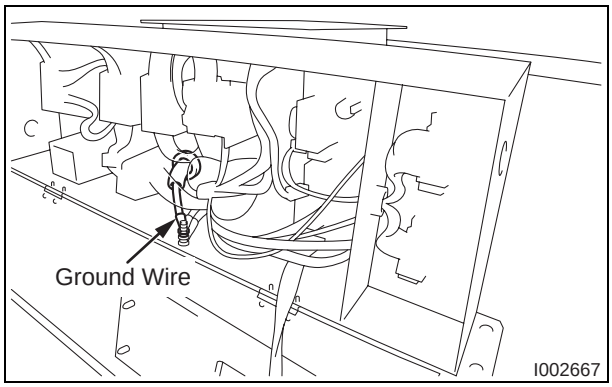

2) Disconnect the ground wire.

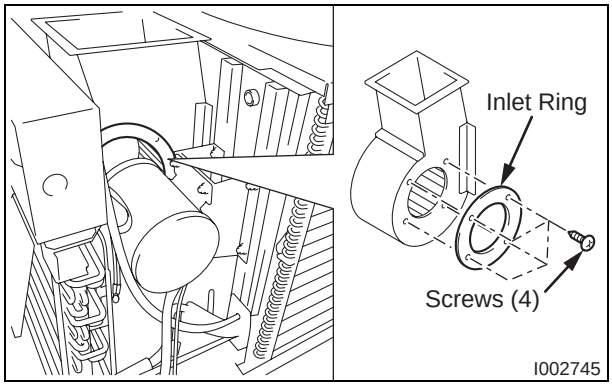

3) Take out the four (4) screws, and then remove the inlet ring.

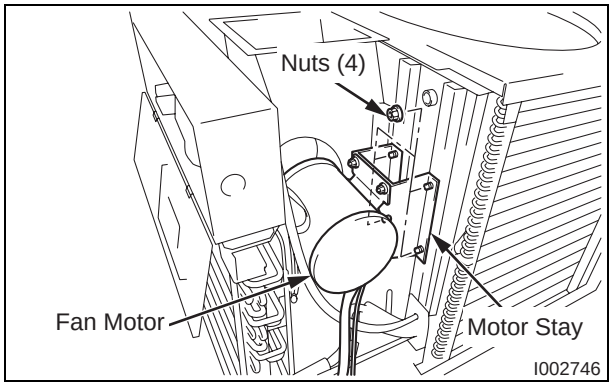

4) Take off the four (4) nuts, and then remove the evaporator fan motor together with the motor stay, inlet ring, and fan.

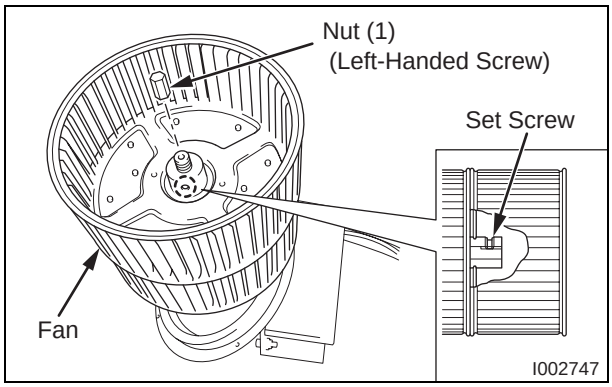

5) Take off the nut (left-handed screw).

⚠ CAUTION

- Tightening torque (for Installation):
  - 32.5 ± 3.6 ft•lbf (44.1 ± 4.9 N•m)

6) Loosen the set screw with a hex key, and then remove the evaporator fan.

⚠ CAUTION

- Set screw torque value (for Installation):
  - 11.1 ± 2.2 ft•lbf (15.0 ± 3.0 N•m)

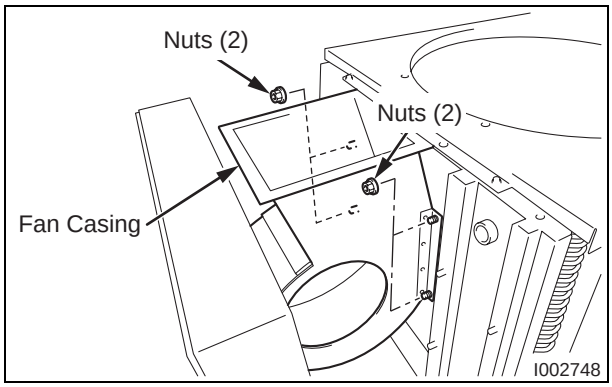

7) Take off the four (4) nuts, and then remove the evaporator fan casing.

7.6 Removal of Electrical Components

(1) Control box

1) Take out the seven (7) bolts, and then remove the front panel. (See “Disassembly” on page 53.)
2) Take out the three (3) screws, and then open the control box cover. (See “Disassembly” on page 53.)
3) Disconnect each connector, and then remove the electrical parts from the control box.
4) Remove electrical parts.
   - Compressor motor relay: Remove two (2) screws and two (2) washers from the control box.
   - Fan motor relay: Remove two (2) screws and two (2) washers from the control box.
   - Reverse phase protector: Pull the reverse phase protector out from the terminal block.
   - Over current relay 1: Remove two (2) screws and two (2) washers from the control box.
   - Over current relay 2: Remove two (2) screws and two (2) washers from the control box.
   - Terminal block 1: Remove two (2) screws from the control box.
   - Terminal block 2: Remove two (2) screws from the control box.
   - Terminal block 3: Remove two (2) screws from the control box.
   - Terminal block (for reverse phase protector): Remove two (2) screws from the control box.
   - Relay board fuse: Take out the fuse from the relay board.
   - Relay board: Remove six (6) supports from the control box.
   - Transformer: Remove four (4) screws from the control box.

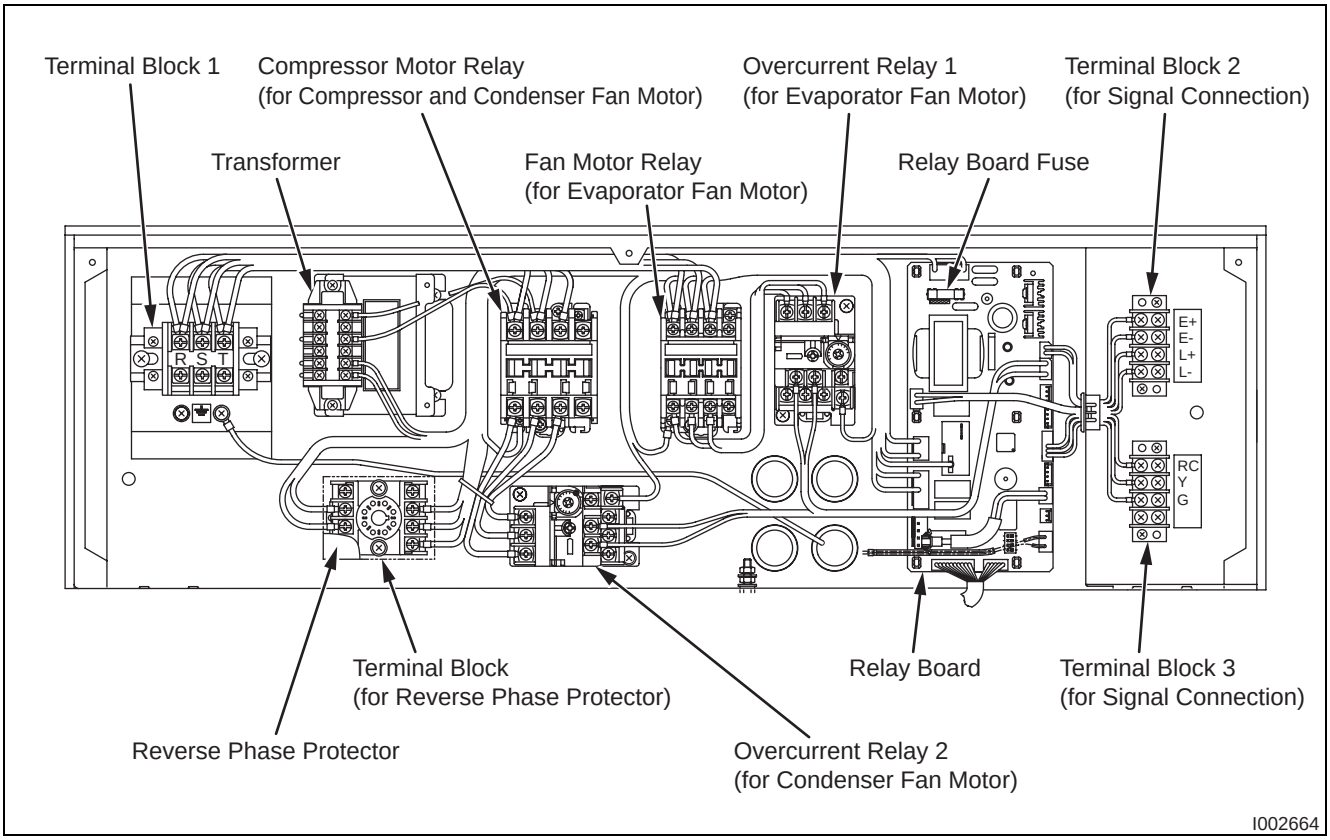

8. REFRIGERANT SYSTEM REPAIR

8.1 Repair of Refrigerant System

- In case there is a leak, obstruction, or trouble in the refrigerant system of the Classic 60, replace or repair the part in question. After replacing any component all connections must be brazed.

(1) Proper brazing techniques

- It is desirable to use a slightly reducing flame. Oxyacetylene is commonly used since it is easy to judge and adjust the condition of the flame. Unlike gas welding, a secondary flame is used for brazing. It is necessary to preheat the base metal properly depending on the shape, size or thermal conductivity of the brazed fitting.
- The most important point in flame brazing is to bring the whole brazed fitting to a proper brazing temperature. Care should be taken to not cause overflow of brazing filler metal, oxidization of brazing filler metal, or deterioration due to the overheating of flux.

(2) Brazed fittings and fitting clearance

- In general, the strength of brazing filler metal is lower than that of the base metal. So, the shape and clearance of the brazed fitting are quite important. As for the shape of the brazed fitting, it is necessary to maximize its adhesive area. The clearance of the brazed fitting must be minimized to facilitate brazing filler metal to flow into it by capillary action.

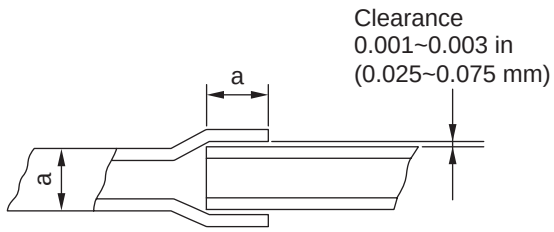

Clearance From The Pipe Fitting and Tubing.

I002225

(3) Cleaning brazing filler metal and pipe

- When the refrigerant system has been opened up, exposure to heat may have caused brazing filler metal to stick to the inside and outside of the pipe. Brazing filler metal may also be compounded with oxygen in the air to form oxide film. Fats and oils may stick to the pipe from handling. All these factors can reduce effectiveness of brazing. It is necessary to eliminate excess brazing filler metal using sand paper and by cleaning thoroughly with a solvent such as trichlene.

⚠ CAUTION

Do not use chlorine cleaner.

(4) Use of dry nitrogen gas

- During brazing, the inside of the pipe undergoes an oxidative reaction due to the brazing flame. Introduce dry nitrogen gas (0.27 gal/min (1 L/min); adjust with the flow regulator) through the pinch-off tube of the refrigerant.

< NOTE >

Take care not to allow dirt, water, oil, etc. to enter into the pipe.

(5) Vertical Joint

- Heat the whole brazed fitting to a proper brazing temperature. Bring the brazing filler metal into contact with the fitting so that the brazing filler metal starts flowing by itself.
- Stop heating the fitting as soon as the brazing filler metal has flown into the clearance. Since the brazing filler metal flows easily into the portion heated to a proper temperature, it is essential to keep the whole fitting at a proper brazing temperature.

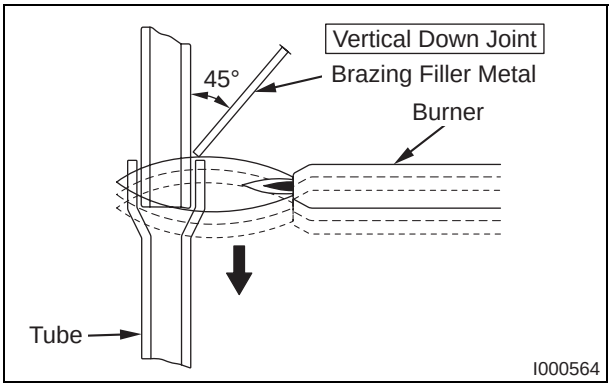

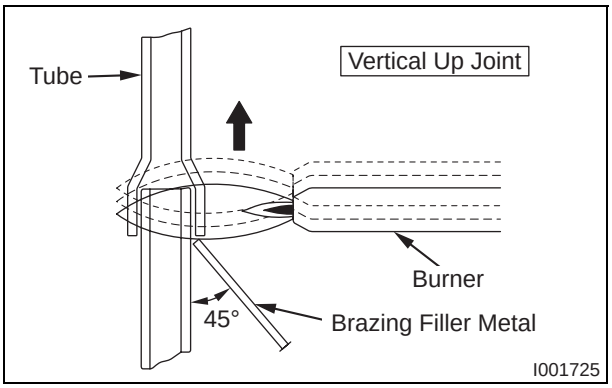

8.2 Removal of Refrigeration Cycle Components

⚠ CAUTION

- Before any refrigeration cycle component can be replaced, it is necessary to recover the refrigerant using standard recovery procedures and equipment.
- To prevent oxidation, dry nitrogen should be conducted (flow rate 0.27 gal/min (1 L/min)) through the pinch-off tube during any brazing operation.
- During any component replacement involving brazing, shield nearby parts with a steel plate, etc., to protect them from the flame.

- Evaporator
- Capillary tube
- Condenser
- Compressor
- High Pressure Switch

< NOTE >

When replacement of the compressor, attach the two pipes (Pipe 1, Pipe 2) which are packaged in Compressor Assy as following figure.

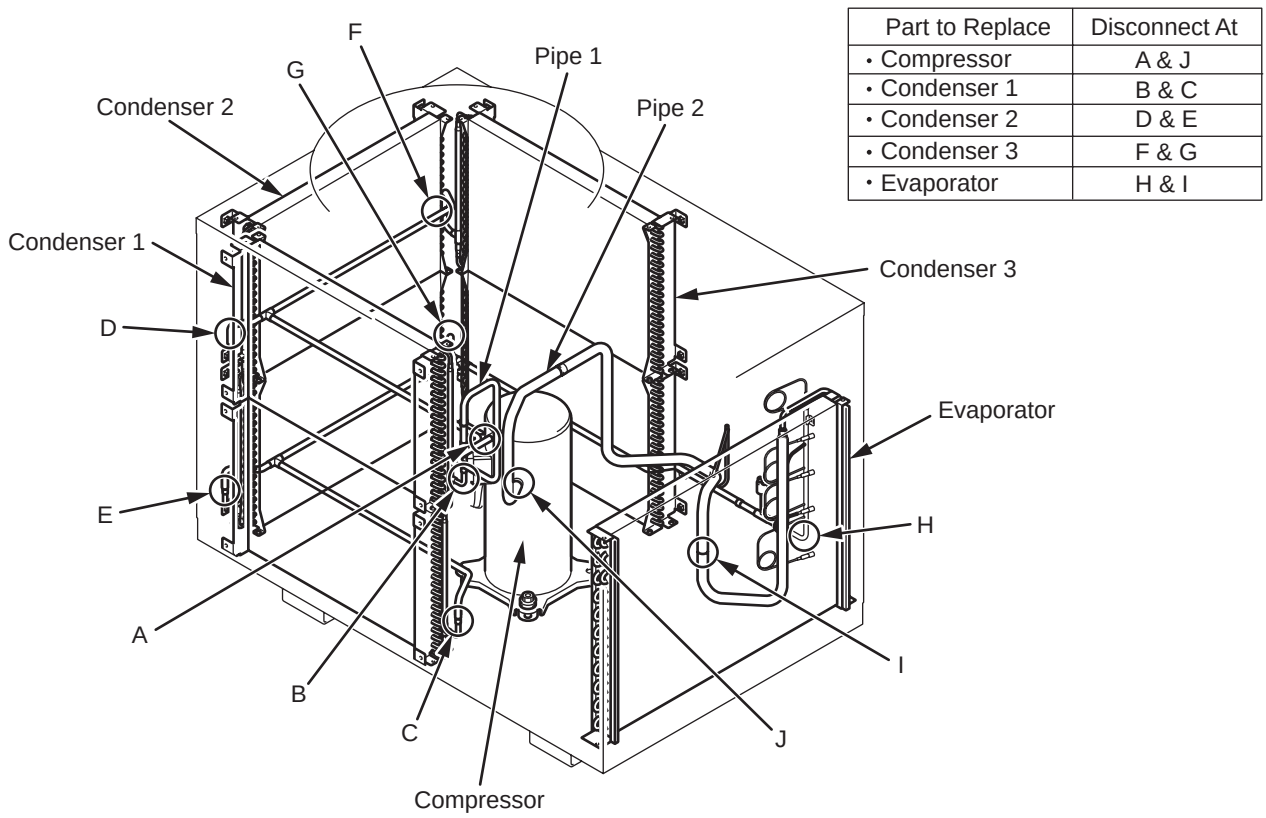

Part to Replace	Disconnect At
• Compressor	A & J
• Condenser 1	B & C
• Condenser 2	D & E
• Condenser 3	F & G
• Evaporator	H & I

8.3 Charging the System with R-410A Refrigerant

- Always ensure that the refrigerant system has been properly evacuated before charging with the specified amount of R-410A.
- Equipments is only for R-410A.
- Liquid charge (no gas charge).
- Make sure not to use more than 90 % of the initial weight of R-410A in the cylinder.

⚠ WARNING

- **When handling refrigerant (R-410A), the following precautions should always be observed:**
  - **Always wear proper eye protection while handling refrigerant.**
  - **Maintain the temperature of the refrigerant container below 104 °F (40 °C).**
  - **Perform repairs in a properly ventilated area. (Never in an enclosed environment.)**
  - **Do not expose refrigerant to an open flame.**
  - **Never smoke while performing repairs, especially when handling refrigerant.**
  - **Be careful the liquid refrigerant does not come in contact with the skin.**
- **If liquid refrigerant strikes eye or skin:**
  - **Do not rub the eye or the skin.**
  - **Splash large quantities of cool water on the eye or the skin.**
  - **Apply clean petroleum jelly to the skin.**
  - **Go immediately to a physician or to a hospital for professional treatment.**

Step 1	Connect manifold gauge.
Step 2	1) Evacuate the system. • 15 min or more. • 30 inHg (100 kPa) or more of vacuum. 2) Stop evacuating the system. • Leave for 5 min. 3) Check the vacuum.
Step 3	Connect to refrigerant source.
Step 4	Test the system for leaks.
Step 5	Charge the system with R-410A. • See specifications on page 8.
Step 6	Remove manifold gauge.

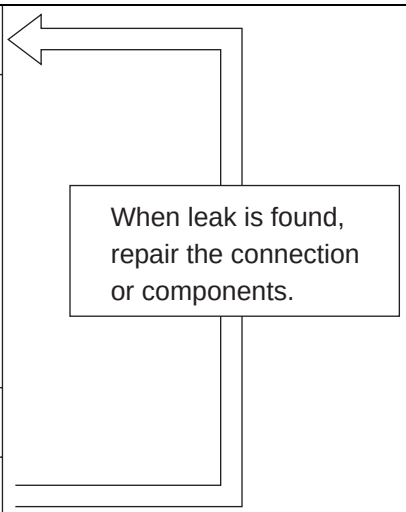

I003045

(1) Connection of gauge manifold

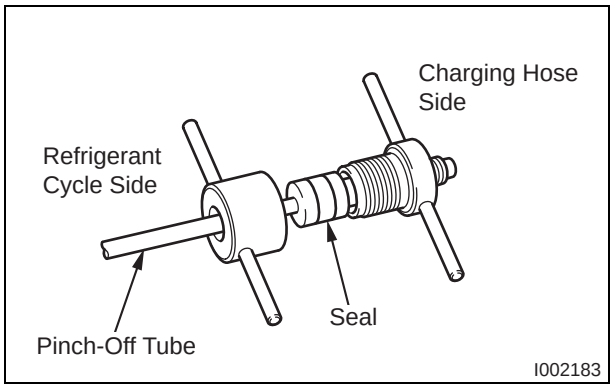

1) Properly remove the crushed end of the pinch-off tube at the high pressure side and the low pressure side of the refrigerant cycle with a pipe cutter.

2) Fit the process tube fitting to the pinch-off tube on both sides.

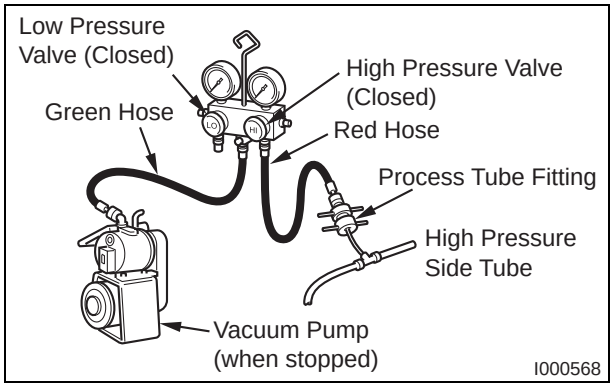

3) Connect the charging hoses (red-high pressure side) for the gauge manifold to the process tube fitting.

< NOTE >

Connect the hoses using care not to mistake the high pressure side for the low pressure side and vice versa.

4) Connect the charging hose (green) at the center of the gauge manifold to the vacuum pump.

(2) Evacuation

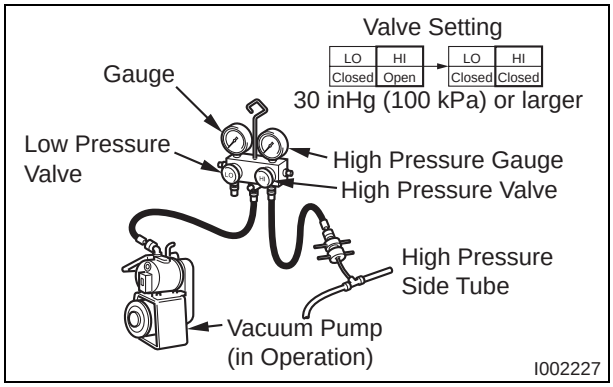

1) Open the high pressure valve (HI) of the gauge manifold.

2) Turn on the vacuum pump to start evacuation. (Evacuate the system for approximately 15 min.)

3) When the low pressure gauge indicates 30 inHg (100 kPa) or larger, turn off the vacuum pump and close the high pressure valves of the gauge manifold.

(3) Checking vacuum

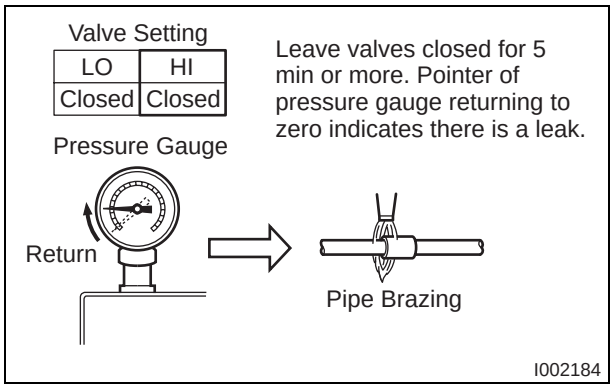

1) Leave the high pressure valve and the low pressure valve of the gauge manifold closed for five min or more, and confirm that the gauge pointer does not return to zero.

2) If the gauge pointer returns gradually to zero there is a leak somewhere in the system (this could also include gauge manifold). Perform leak check according to procedure indicated in the next step. Once leak has been found and repaired evacuate the system once more, and confirm system holds vacuum.

(4) Checking gas leak

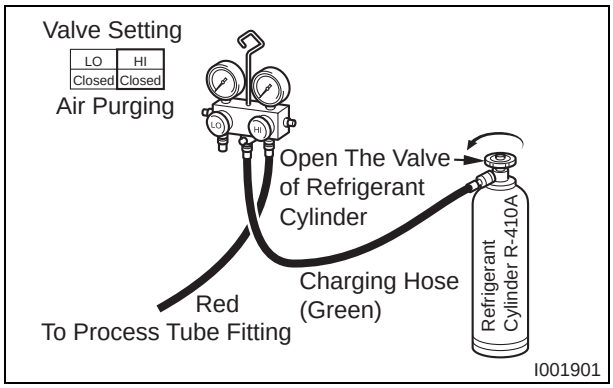

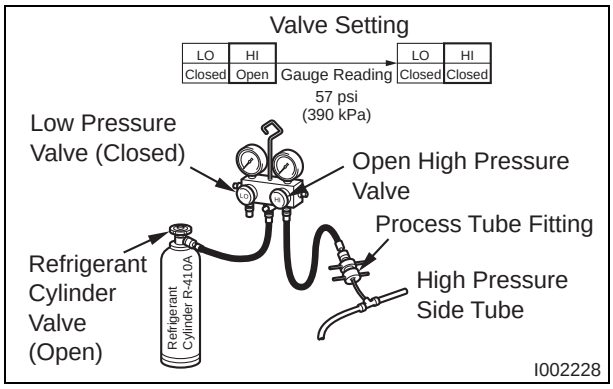

1) Remove the charging hose (green) from the vacuum pump, and connect the hose to the refrigerant cylinder (R-410A).

2) Loosen the nut on the gauge manifold side of the charging hose (green).

3) Open the valve of refrigerant cylinder perform air purging in the charging hose (green). Then tighten the nut.

4) Open the high pressure valve of the gauge manifold. Charge the system with refrigerant until the low pressure gauge indicates 57 psi (390 kPa). After charging is complete, close the high pressure valve.

5) Open the valve of refrigerant cylinder perform air purging in the charging hose (green). Then tighten the nut.

6) Check carefully for gas leaks inside the refrigerant system using the gas leak tester.

7) Repair any leak.

⚠ WARNING

Do not attempt any repair on a charged system.

⚠ WARNING

Before checking for gas leaks, fully confirm that there is nothing flammable in the area to cause an explosion or fire. Contact of refrigerant with an open fire generates toxic gas.

(5) Evacuation (repeat)

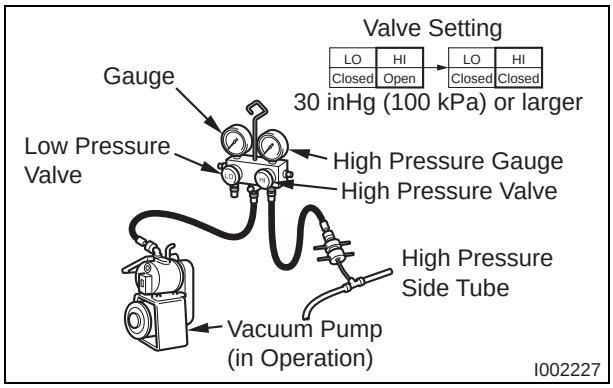

1) Close the valve of the refrigerant cylinder. Then remove the charging hose (green) from the refrigerant cylinder, and connect it to the refrigerant recovery machine.

< NOTE >

Keep the high pressure valve and the low pressure valve of the gauge manifold closed.

2) Using procedure in the “Evacuation”, evacuate the system until the low pressure gauge indicates 30 inHg (100 kPa) or larger. (For 15 min or more.)

3) After evacuation is complete, close the high and the low pressure valves of the gauge manifold.

⚠ CAUTION

Make sure to evacuate the system twice or more using the repetitive vacuum method. Evacuate the system an additional time on rainy or humid days.

8.4 Refrigerant Charging Work

(1) Refrigerant charging

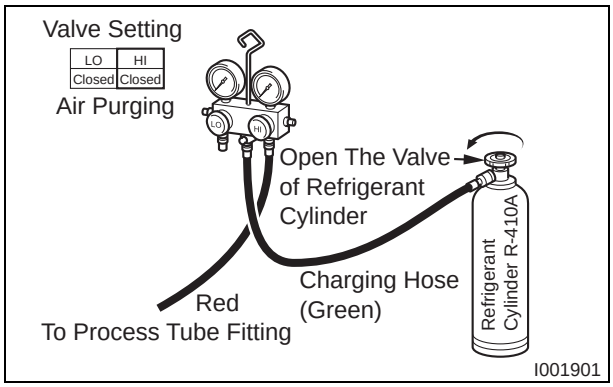

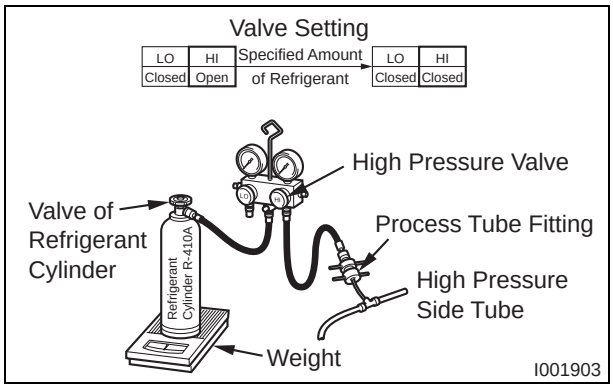

1) Remove the charging hose (green) from the vacuum pump, and connect it to the refrigerant cylinder
(R-410A).

2) Loosen the nut on the gauge manifold side of the charging hose (green). Open the valve of the charging hose (green). Open the valve of the refrigerant cylinder. After air purging, tighten this nut and close the valve of the refrigerant cylinder.

3) Securely place the refrigerant cylinder on a scale with a weighing capacity of 70 lb (30 kg) that is graduated by 0.2 oz (5 g).

4) Open the high pressure valve of the gauge manifold and the valve of the refrigerant cylinder. Charge the system with refrigerant to the specified amount.

Standard Amount of Refrigerant: 5.50 lb (2.50 kg)

⚠ CAUTION

The amount of refrigerant charged has a great effect on the cooling capacity of the unit. Charge to the specified amount, always observing the scale graduations while charging.

5) Close the high pressure valve of the gauge manifold and the valve of the refrigerant cylinder.

(2) Removal of gauge manifold

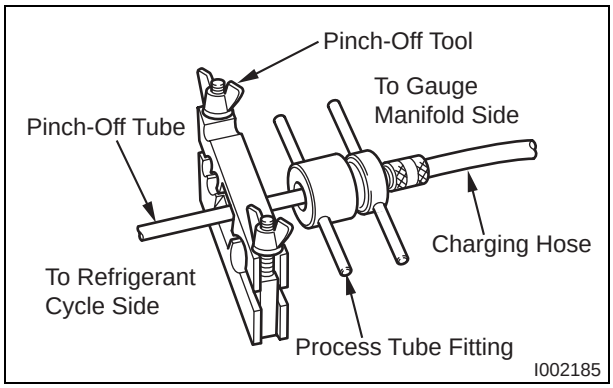

1) Crimp the pinch-off tube with a pinch-off tool.

2) Remove the gauge manifold and the process tube fitting. Crush the end of the pinch-off tube.

3) Braze the end of the pinch-off tube.

4) Ensure that a gas leak is not present at the pinched off portion and the brazed end.

9. REASSEMBLY

9.1 Removal of Unit

- Reassemble the unit in the reverse order of removal. Described below are the parts that require special care in reassembling the unit. Perform all wiring or rewiring as referenced in the wiring diagram.

9.2 Compressor Mounting

- Mount the compressor on the frame, using cushions, steel collars, plate washers and nuts.

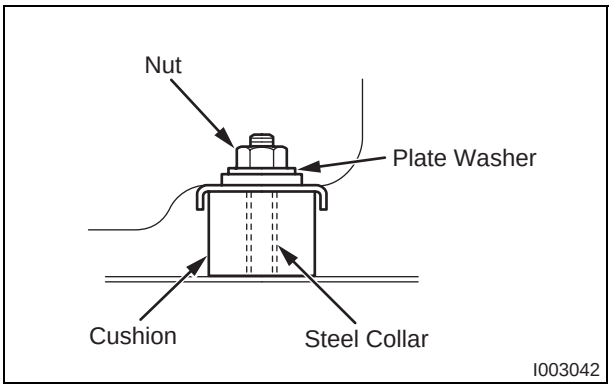

9.3 Condenser Fan Assembly

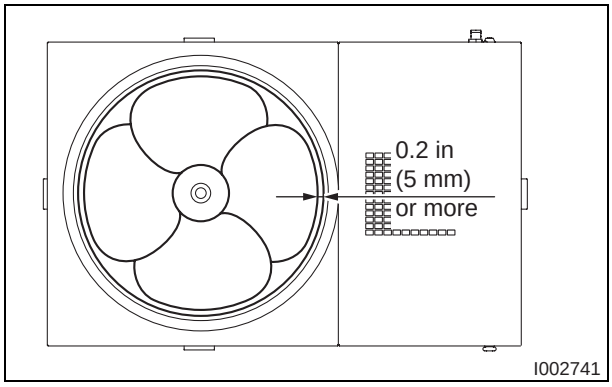

- Install condenser fan. Allow a clearance of 0.2 in (5 mm) or more on side of the condenser fan.

⚠ CAUTION

- Tightening torque:
  - 32.5 ± 3.6 ft•lbf (44.1 ± 4.9 N•m)

9.4 Evaporator Fan Assembly

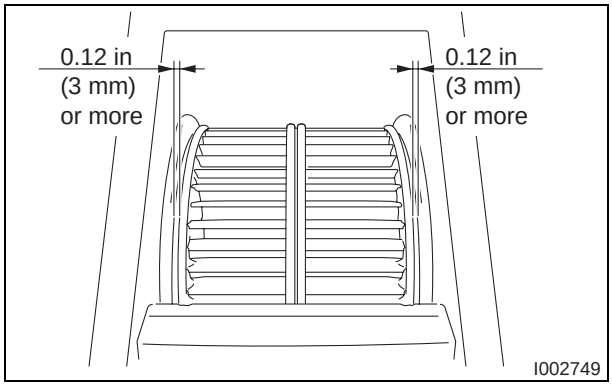

- Install evaporator fan. Allow a clearance of 0.12 in (3 mm) or more on side of the evaporator fan.

⚠ CAUTION

- Tightening torque:
  - 32.5 ± 3.6 ft•lbf (44.1 ± 4.9 N•m)

9.5 Wiring Notice

- Secure the wires using clamps so that they do not come into contact with the edges of the structure, etc. Secure the wires using clamps in the same position they were before removal.

9.6 Perform the Inspection

- Perform the inspection of cooling performance and check for abnormal noise or abnormal vibration.

DENSO

DENSO SALES CALIFORNIA, INC.

Long Beach, CA 90810
www.movincool.com

P/N: SV0034-00 First Issue: April 2009